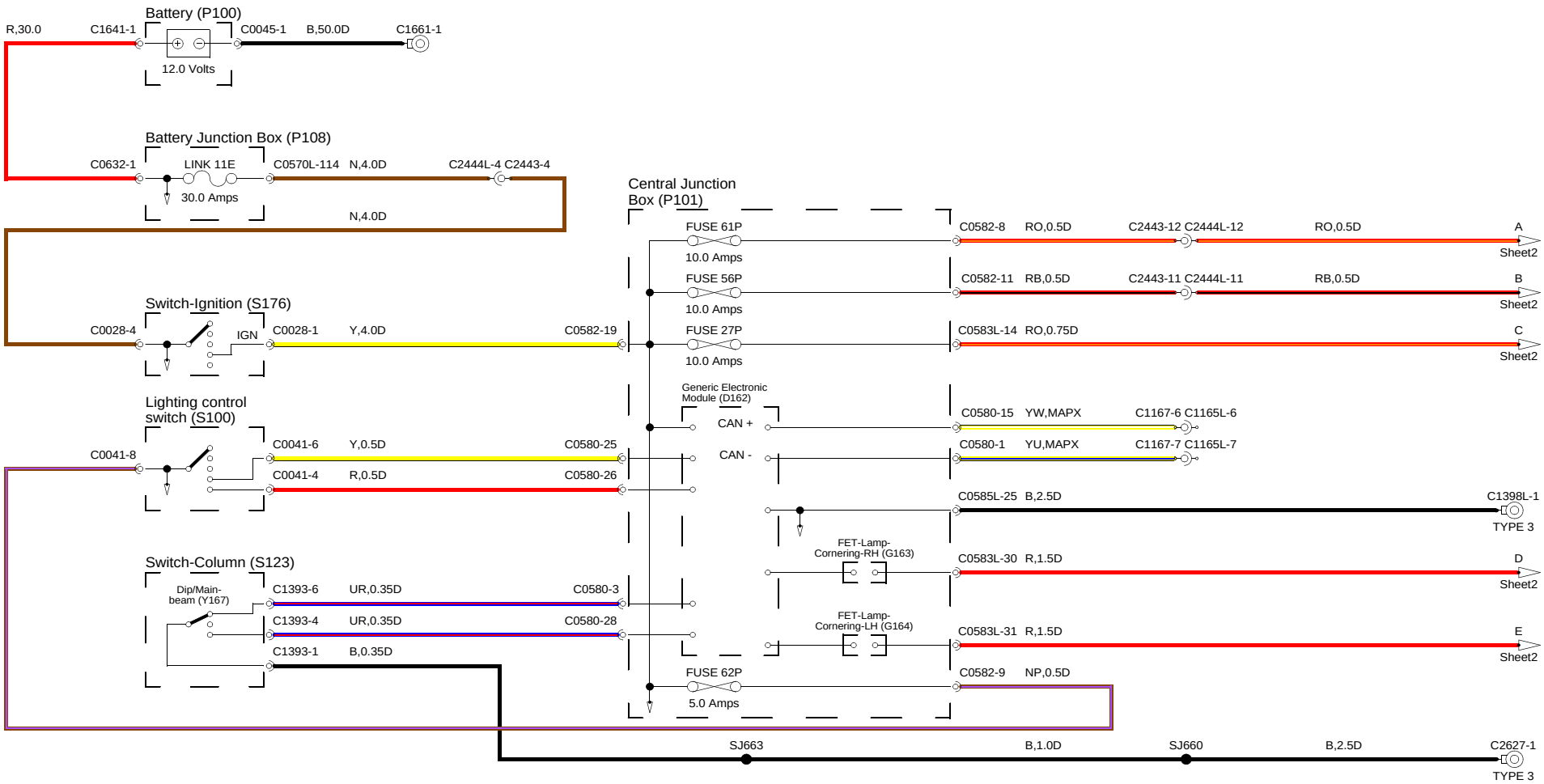
Battery (P100)
R,30.0
C1641-1
C0045-1
B,50.0D
C1661-1
12.0 Volts
Battery Junction Box (P108)
C0632-1
LINK 11E
C0570L-114
N,4.0D
C2444L-4 C2443-4
30.0 Amps
N,4.0D
Central Junction Box (P101)
FUSE 61P
10.0 Amps
C0582-8
RO,0.5D
C2443-12 C2444L-12
RO,0.5D
A
Sheet2
FUSE 56P
10.0 Amps
C0582-11
RB,0.5D
C2443-11 C2444L-11
RB,0.5D
B
Sheet2
Switch-Ignition (S176)
C0028-4
IGN
C0028-1
Y,4.0D
C0582-19
FUSE 27P
10.0 Amps
C0583L-14
RO,0.75D
C
Sheet2
Generic Electronic Module (D162)
Lighting control switch (S100)
C0041-8
C0041-6
Y,0.5D
C0580-25
C0041-4
R,0.5D
C0580-26
CAN +
CAN -
C0580-15
YW,MAPX
C1167-6 C1165L-6
C0580-1
YU,MAPX
C1167-7 C1165L-7
C0585L-25
B,2.5D
C1398L-1
TYPE 3
FET-Lamp-Cornering-RH (G163)
C0583L-30
R,1.5D
D
Sheet2
Switch-Column (S123)
Dip/Main-beam (Y167)
C1393-6
UR,0.35D
C0580-3
C1393-4
UR,0.35D
C0580-28
C1393-1
B,0.35D
FET-Lamp-Cornering-LH (G164)
C0583L-31
R,1.5D
E
Sheet2
FUSE 62P
5.0 Amps
C0582-9
NP,0.5D
SJ663
B,1.0D
SJ660
B,2.5D
C2627-1
TYPE 3

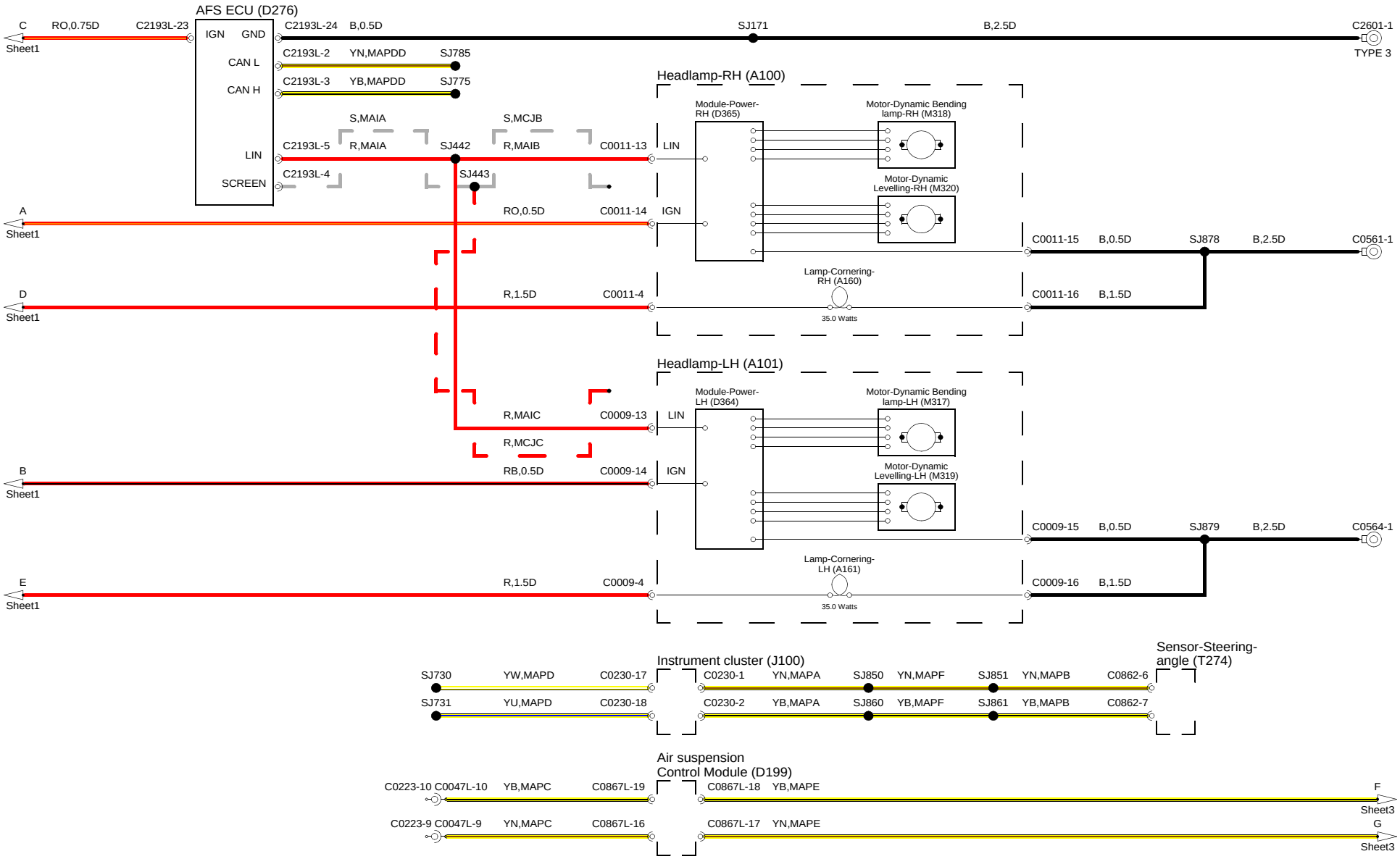
AFS ECU (D276)
IGN
GND
CAN L
CAN H
LIN
SCREEN
C
RO,0.75D
C2193L-23
Sheet1
C2193L-24
B,0.5D
SJ171
B,2.5D
C2601-1
TYPE 3
C2193L-2
YN,MAPDD
SJ785
C2193L-3
YB,MAPDD
SJ775
S,MAIA
S,MCJB
C2193L-5
R,MAIA
SJ442
R,MAIB
C0011-13
LIN
C2193L-4
SJ443
Headlamp-RH (A100)
Module-Power-RH (D365)
Motor-Dynamic Bending lamp-RH (M318)
Motor-Dynamic Levelling-RH (M320)
A
RO,0.5D
C0011-14
IGN
C0011-15
B,0.5D
SJ878
B,2.5D
C0561-1
Lamp-Cornering-RH (A160)
D
R,1.5D
C0011-4
C0011-16
B,1.5D
35.0 Watts
Headlamp-LH (A101)
Module-Power-LH (D364)
Motor-Dynamic Bending lamp-LH (M317)
R,MAIC
C0009-13
LIN
R,MCJC
B
RB,0.5D
C0009-14
IGN
Motor-Dynamic Levelling-LH (M319)
C0009-15
B,0.5D
SJ879
B,2.5D
C0564-1
Lamp-Cornering-LH (A161)
E
R,1.5D
C0009-4
C0009-16
B,1.5D
35.0 Watts
Sensor-Steering-angle (T274)
Instrument cluster (J100)
SJ730
YW,MAPD
C0230-17
C0230-1
YN,MAPA
SJ850
YN,MAPF
SJ851
YN,MAPB
C0862-6
SJ731
YU,MAPD
C0230-18
C0230-2
YB,MAPA
SJ860
YB,MAPF
SJ861
YB,MAPB
C0862-7
Air suspension
Control Module (D199)
C0223-10 C0047L-10
YB,MAPC
C0867L-19
C0867L-18
YB,MAPE
F
Sheet3
C0223-9 C0047L-9
YN,MAPC
C0867L-16
C0867L-17
YN,MAPE
G
Sheet3

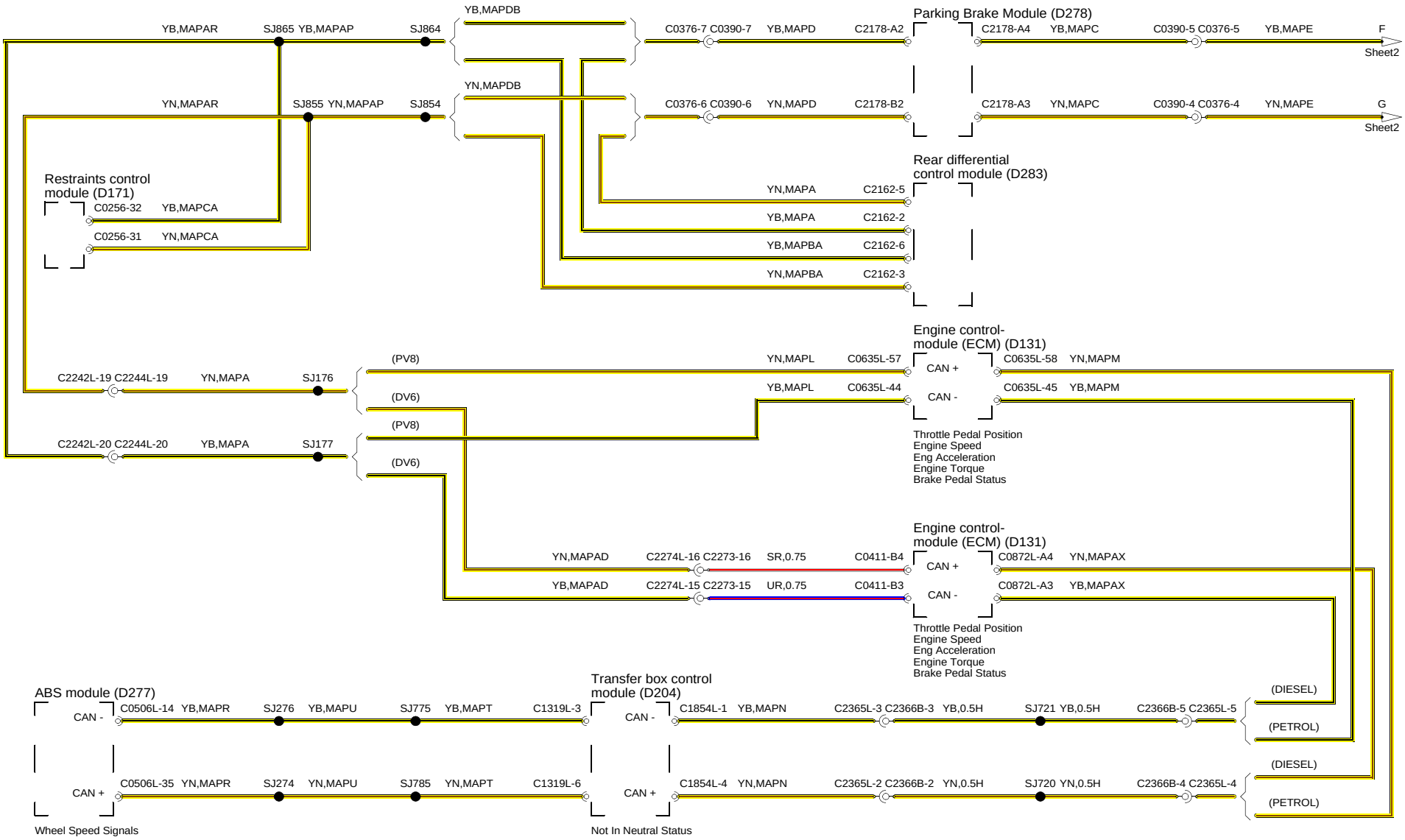
YB,MAPDB
YB,MAPAR
SJ865
YB,MAPAP
SJ864
C0376-7 C0390-7
YB,MAPD
C2178-A2
Parking Brake Module (D278)
C2178-A4
YB,MAPC
C0390-5 C0376-5
YB,MAPE
F
Sheet2
YN,MAPDB
YN,MAPAR
SJ855
YN,MAPAP
SJ854
C0376-6 C0390-6
YN,MAPD
C2178-B2
C2178-A3
YN,MAPC
C0390-4 C0376-4
YN,MAPE
G
Sheet2
Rear differential
control module (D283)
Restraints control
module (D171)
C0256-32
YB,MAPCA
YN,MAPA
C2162-5
YB,MAPA
C2162-2
C0256-31
YN,MAPCA
YB,MAPBA
C2162-6
YN,MAPBA
C2162-3
Engine control-
module (ECM) (D131)
(PV8)
YN,MAPL
C0635L-57
CAN +
C0635L-58
YN,MAPM
C2242L-19 C2244L-19
YN,MAPA
SJ176
(DV6)
YB,MAPL
C0635L-44
CAN -
C0635L-45
YB,MAPM
(PV8)
C2242L-20 C2244L-20
YB,MAPA
SJ177
(DV6)
Throttle Pedal Position
Engine Speed
Eng Acceleration
Engine Torque
Brake Pedal Status
Engine control-
module (ECM) (D131)
YN,MAPAD
C2274L-16 C2273-16
SR,0.75
C0411-B4
CAN +
C0872L-A4
YN,MAPAX
YB,MAPAD
C2274L-15 C2273-15
UR,0.75
C0411-B3
CAN -
C0872L-A3
YB,MAPAX
Throttle Pedal Position
Engine Speed
Eng Acceleration
Engine Torque
Brake Pedal Status
ABS module (D277)
Transfer box control
module (D204)
CAN -
C0506L-14
YB,MAPR
SJ276
YB,MAPU
SJ775
YB,MAPT
C1319L-3
CAN -
C1854L-1
YB,MAPN
C2365L-3 C2366B-3
YB,0.5H
SJ721
YB,0.5H
C2366B-5 C2365L-5
(DIESEL)
(PETROL)
CAN +
C0506L-35
YN,MAPR
SJ274
YN,MAPU
SJ785
YN,MAPT
C1319L-6
CAN +
C1854L-4
YN,MAPN
C2365L-2 C2366B-2
YN,0.5H
SJ720
YN,0.5H
C2366B-4 C2365L-4
(DIESEL)
(PETROL)
Wheel Speed Signals
Not In Neutral Status

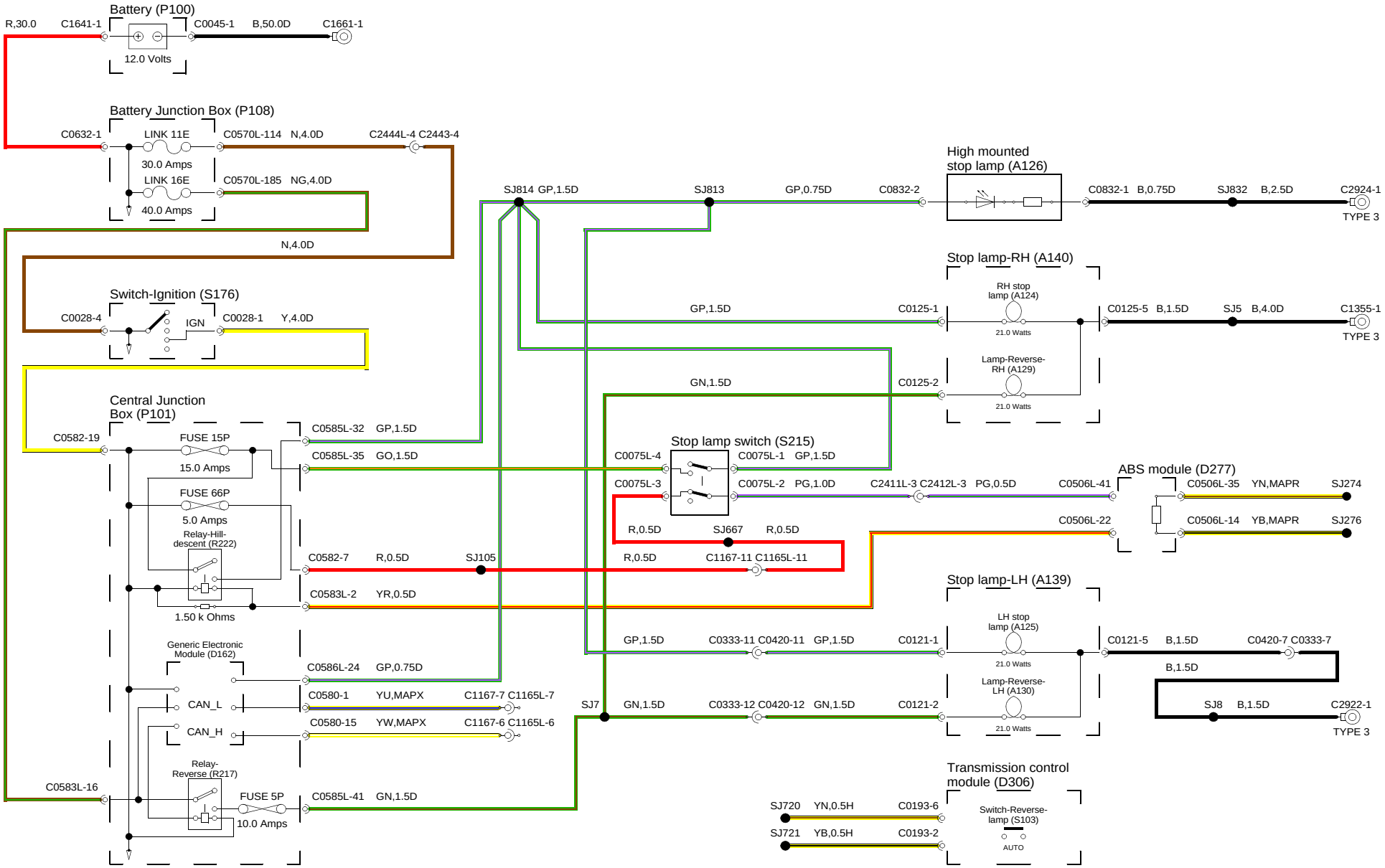
Battery (P100)
R,30.0
C1641-1
C0045-1
B,50.0D
C1661-1
12.0 Volts
Battery Junction Box (P108)
C0632-1
LINK 11E
30.0 Amps
C0570L-114
N,4.0D
C2444L-4 C2443-4
LINK 16E
40.0 Amps
C0570L-185
NG,4.0D
N,4.0D
Switch-Ignition (S176)
C0028-4
IGN
C0028-1
Y,4.0D
Central Junction Box (P101)
C0582-19
FUSE 15P
15.0 Amps
FUSE 66P
5.0 Amps
Relay-Hill-descent (R222)
1.50 k Ohms
Generic Electronic Module (D162)
CAN_L
CAN_H
Relay-Reverse (R217)
C0583L-16
FUSE 5P
10.0 Amps
C0585L-32
GP,1.5D
C0585L-35
GO,1.5D
C0582-7
R,0.5D
SJ105
C0583L-2
YR,0.5D
C0586L-24
GP,0.75D
C0580-1
YU,MAPX
C1167-7 C1165L-7
C0580-15
YW,MAPX
C1167-6 C1165L-6
C0585L-41
GN,1.5D
SJ814 GP,1.5D
SJ813
GP,0.75D
C0832-2
High mounted stop lamp (A126)
C0832-1
B,0.75D
SJ832
B,2.5D
C2924-1
TYPE 3
Stop lamp-RH (A140)
RH stop lamp (A124)
21.0 Watts
GP,1.5D
C0125-1
C0125-5
B,1.5D
SJ5
B,4.0D
C1355-1
TYPE 3
Lamp-Reverse-RH (A129)
GN,1.5D
C0125-2
Stop lamp switch (S215)
C0075L-4
C0075L-1
GP,1.5D
C0075L-3
C0075L-2
PG,1.0D
C2411L-3 C2412L-3
PG,0.5D
C0506L-41
ABS module (D277)
C0506L-35
YN,MAPR
SJ274
C0506L-22
C0506L-14
YB,MAPR
SJ276
R,0.5D
SJ667
R,0.5D
R,0.5D
C1167-11 C1165L-11
Stop lamp-LH (A139)
LH stop lamp (A125)
GP,1.5D
C0333-11 C0420-11
GP,1.5D
C0121-1
C0121-5
B,1.5D
C0420-7 C0333-7
B,1.5D
Lamp-Reverse-LH (A130)
SJ7
GN,1.5D
C0333-12 C0420-12
GN,1.5D
C0121-2
SJ8
B,1.5D
C2922-1
TYPE 3
Transmission control module (D306)
SJ720
YN,0.5H
C0193-6
SJ721
YB,0.5H
C0193-2
Switch-Reverse-lamp (S103)
AUTO

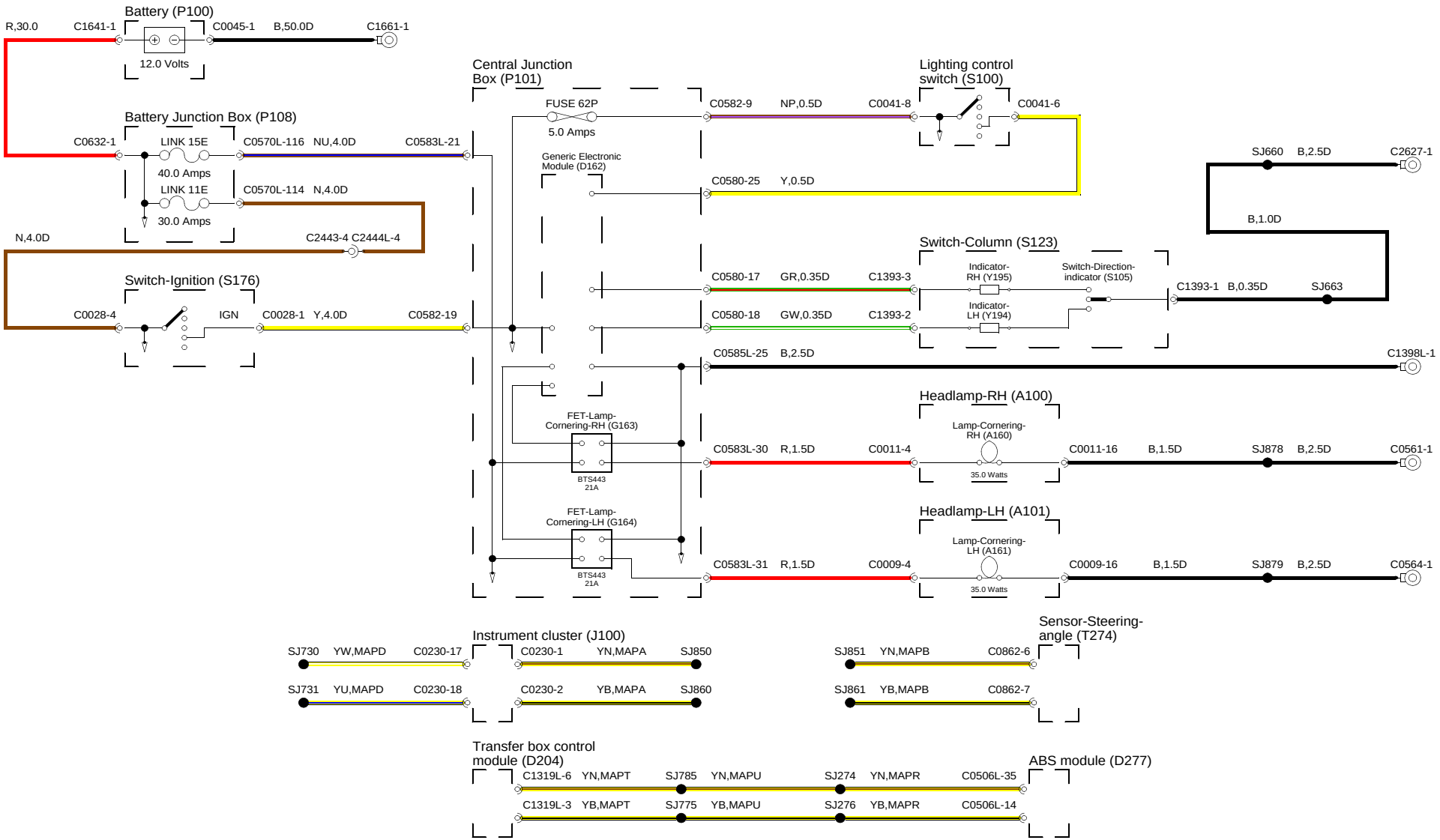
Battery (P100)
R,30.0
C1641-1
C0045-1
B,50.0D
C1661-1
12.0 Volts
Battery Junction Box (P108)
C0632-1
LINK 15E
40.0 Amps
C0570L-116
NU,4.0D
C0583L-21
LINK 11E
30.0 Amps
C0570L-114
N,4.0D
N,4.0D
C2443-4 C2444L-4
Switch-Ignition (S176)
C0028-4
IGN
C0028-1
Y,4.0D
C0582-19
Central Junction Box (P101)
FUSE 62P
5.0 Amps
Generic Electronic Module (D162)
FET-Lamp-Cornering-RH (G163)
BTS443 21A
FET-Lamp-Cornering-LH (G164)
BTS443 21A
C0582-9
NP,0.5D
C0041-8
Lighting control switch (S100)
C0041-6
C0580-25
Y,0.5D
SJ660
B,2.5D
C2627-1
B,1.0D
Switch-Column (S123)
C0580-17
GR,0.35D
C1393-3
Indicator-RH (Y195)
Switch-Direction-indicator (S105)
C1393-1
B,0.35D
SJ663
C0580-18
GW,0.35D
C1393-2
Indicator-LH (Y194)
C0585L-25
B,2.5D
C1398L-1
Headlamp-RH (A100)
Lamp-Cornering-RH (A160)
35.0 Watts
C0583L-30
R,1.5D
C0011-4
C0011-16
B,1.5D
SJ878
B,2.5D
C0561-1
Headlamp-LH (A101)
Lamp-Cornering-LH (A161)
35.0 Watts
C0583L-31
R,1.5D
C0009-4
C0009-16
B,1.5D
SJ879
B,2.5D
C0564-1
Instrument cluster (J100)
SJ730
YW,MAPD
C0230-17
C0230-1
YN,MAPA
SJ850
SJ731
YU,MAPD
C0230-18
C0230-2
YB,MAPA
SJ860
Sensor-Steering-angle (T274)
SJ851
YN,MAPB
C0862-6
SJ861
YB,MAPB
C0862-7
Transfer box control module (D204)
C1319L-6
YN,MAPT
SJ785
YN,MAPU
SJ274
YN,MAPR
C0506L-35
C1319L-3
YB,MAPT
SJ775
YB,MAPU
SJ276
YB,MAPR
C0506L-14
ABS module (D277)

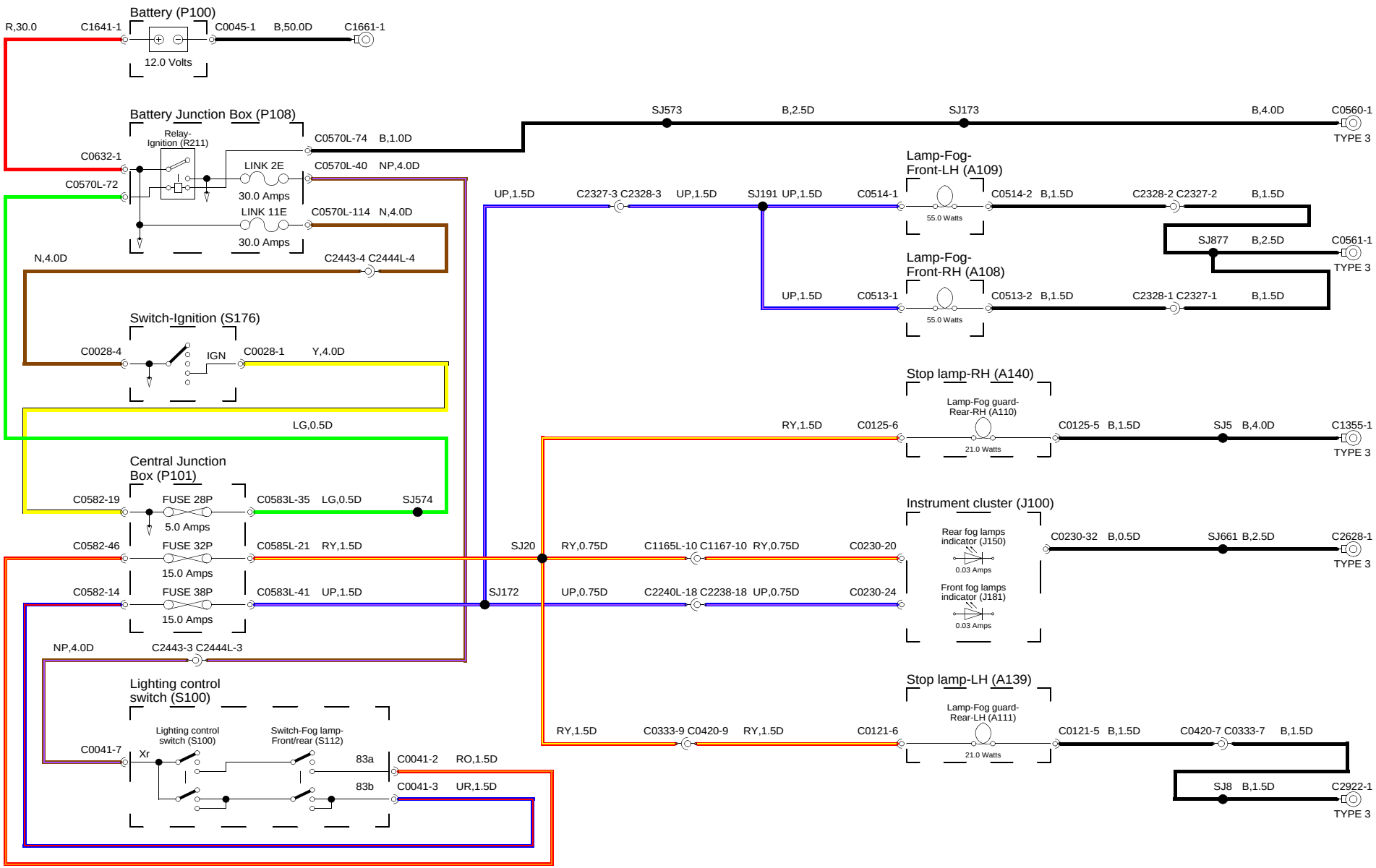
Battery (P100)
R,30.0
C1641-1
C0045-1
B,50.0D
C1661-1
12.0 Volts
Battery Junction Box (P108)
Relay-
Ignition (R211)
C0632-1
C0570L-72
C0570L-74
B,1.0D
LINK 2E
C0570L-40
NP,4.0D
30.0 Amps
LINK 11E
C0570L-114
N,4.0D
30.0 Amps
N,4.0D
C2443-4 C2444L-4
Switch-Ignition (S176)
C0028-4
IGN
C0028-1
Y,4.0D
LG,0.5D
Central Junction
Box (P101)
C0582-19
FUSE 28P
C0583L-35
LG,0.5D
SJ574
5.0 Amps
C0582-46
FUSE 32P
C0585L-21
RY,1.5D
15.0 Amps
C0582-14
FUSE 38P
C0583L-41
UP,1.5D
15.0 Amps
NP,4.0D
C2443-3 C2444L-3
Lighting control
switch (S100)
Lighting control
switch (S100)
Switch-Fog lamp-
Front/rear (S112)
C0041-7
Xr
83a
C0041-2
RO,1.5D
83b
C0041-3
UR,1.5D
SJ573
B,2.5D
SJ173
B,4.0D
C0560-1
TYPE 3
UP,1.5D
C2327-3 C2328-3
UP,1.5D
SJ191 UP,1.5D
C0514-1
Lamp-Fog-
Front-LH (A109)
55.0 Watts
C0514-2 B,1.5D
C2328-2 C2327-2
B,1.5D
SJ877
B,2.5D
C0561-1
TYPE 3
Lamp-Fog-
Front-RH (A108)
UP,1.5D
C0513-1
55.0 Watts
C0513-2 B,1.5D
C2328-1 C2327-1
B,1.5D
Stop lamp-RH (A140)
Lamp-Fog guard-
Rear-RH (A110)
RY,1.5D
C0125-6
21.0 Watts
C0125-5 B,1.5D
SJ5 B,4.0D
C1355-1
TYPE 3
Instrument cluster (J100)
SJ20
RY,0.75D
C1165L-10 C1167-10 RY,0.75D
C0230-20
Rear fog lamps
indicator (J150)
0.03 Amps
C0230-32 B,0.5D
SJ661 B,2.5D
C2628-1
TYPE 3
SJ172
UP,0.75D
C2240L-18 C2238-18 UP,0.75D
C0230-24
Front fog lamps
indicator (J181)
0.03 Amps
Stop lamp-LH (A139)
Lamp-Fog guard-
Rear-LH (A111)
RY,1.5D
C0333-9 C0420-9
RY,1.5D
C0121-6
21.0 Watts
C0121-5 B,1.5D
C0420-7 C0333-7
B,1.5D
SJ8 B,1.5D
C2922-1
TYPE 3

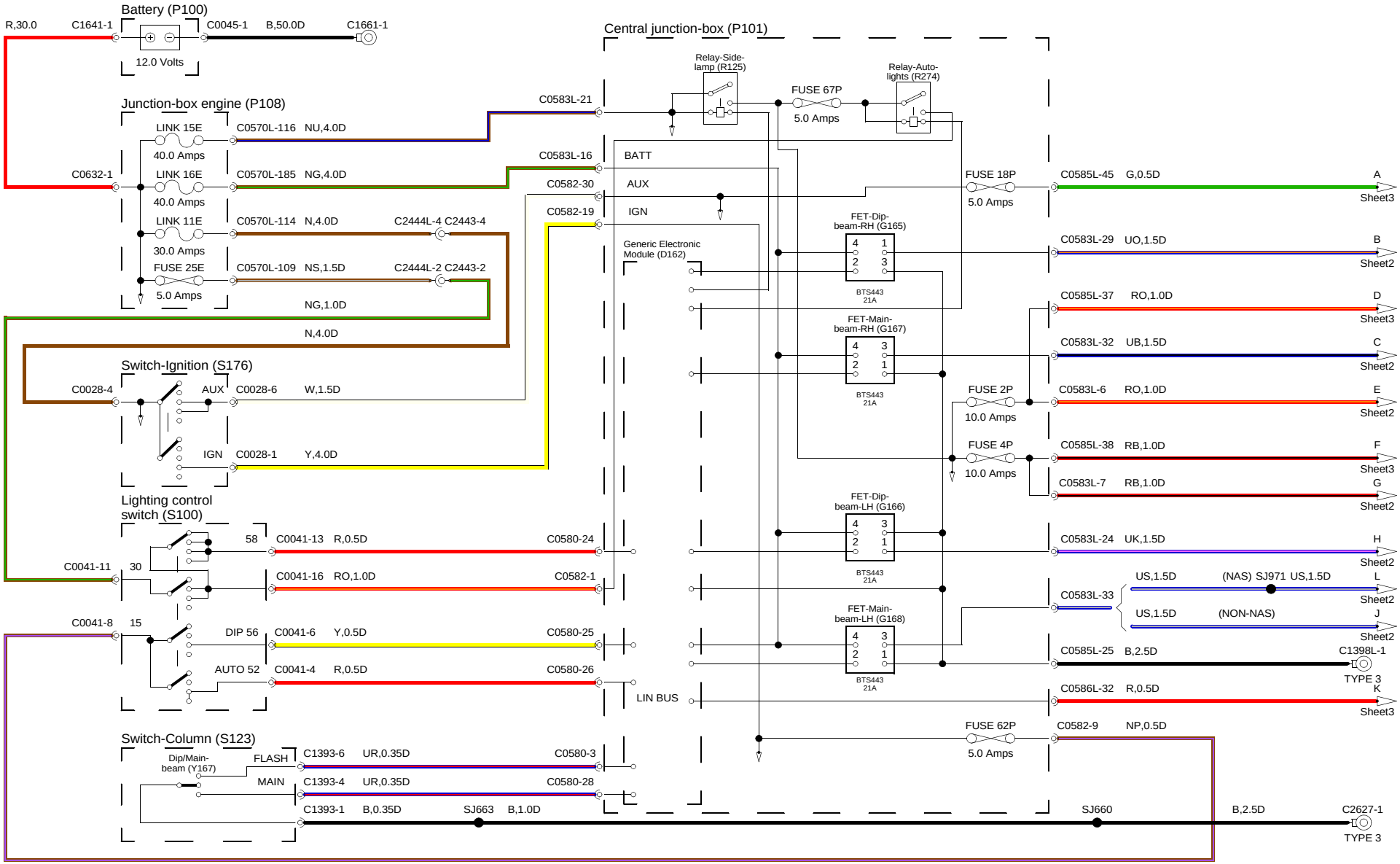
Battery (P100)
R,30.0
C1641-1
C0045-1
B,50.0D
C1661-1
12.0 Volts
Junction-box engine (P108)
LINK 15E
40.0 Amps
C0570L-116
NU,4.0D
C0632-1
LINK 16E
40.0 Amps
C0570L-185
NG,4.0D
LINK 11E
30.0 Amps
C0570L-114
N,4.0D
C2444L-4 C2443-4
FUSE 25E
5.0 Amps
C0570L-109
NS,1.5D
C2444L-2 C2443-2
NG,1.0D
N,4.0D
Switch-Ignition (S176)
C0028-4
AUX
C0028-6
W,1.5D
IGN
C0028-1
Y,4.0D
Lighting control switch (S100)
C0041-11
30
58
C0041-13
R,0.5D
C0580-24
C0041-16
RO,1.0D
C0582-1
C0041-8
15
DIP 56
C0041-6
Y,0.5D
C0580-25
AUTO 52
C0041-4
R,0.5D
C0580-26
Switch-Column (S123)
Dip/Main-beam (Y167)
FLASH
C1393-6
UR,0.35D
C0580-3
MAIN
C1393-4
UR,0.35D
C0580-28
C1393-1
B,0.35D
SJ663
B,1.0D
Central junction-box (P101)
C0583L-21
C0583L-16
C0582-30
C0582-19
BATT
AUX
IGN
Generic Electronic Module (D162)
LIN BUS
Relay-Side-lamp (R125)
FUSE 67P
5.0 Amps
Relay-Auto-lights (R274)
FET-Dip-beam-RH (G165)
FET-Main-beam-RH (G167)
FET-Dip-beam-LH (G166)
FET-Main-beam-LH (G168)
BTS443 21A
FUSE 18P
5.0 Amps
FUSE 2P
10.0 Amps
FUSE 4P
10.0 Amps
FUSE 62P
5.0 Amps
C0585L-45
G,0.5D
A
Sheet3
C0583L-29
UO,1.5D
B
Sheet2
C0585L-37
RO,1.0D
D
Sheet3
C0583L-32
UB,1.5D
C
Sheet2
C0583L-6
RO,1.0D
E
Sheet2
C0585L-38
RB,1.0D
F
Sheet3
C0583L-7
RB,1.0D
G
Sheet2
C0583L-24
UK,1.5D
H
Sheet2
C0583L-33
US,1.5D
(NAS)
SJ971
US,1.5D
L
Sheet2
US,1.5D
(NON-NAS)
J
Sheet2
C0585L-25
B,2.5D
C1398L-1
TYPE 3
C0586L-32
R,0.5D
K
Sheet3
C0582-9
NP,0.5D
SJ660
B,2.5D
C2627-1
TYPE 3

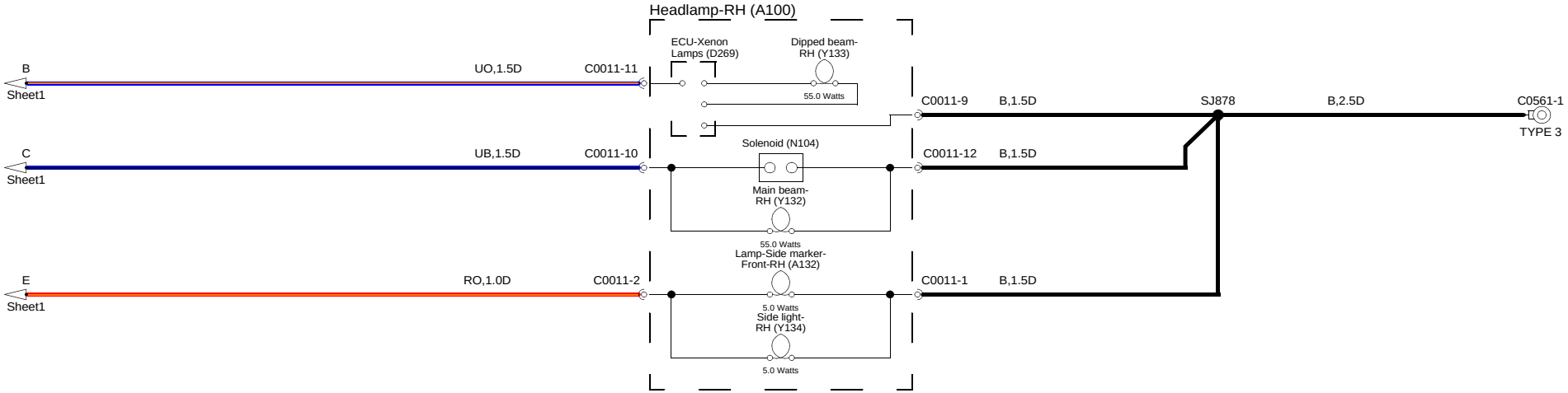
Headlamp-RH (A100)
ECU-Xenon Lamps (D269)
Dipped beam-RH (Y133)
55.0 Watts
B
Sheet1
UO,1.5D
C0011-11
C0011-9
B,1.5D
SJ878
B,2.5D
C0561-1
TYPE 3
Solenoid (N104)
C
Sheet1
UB,1.5D
C0011-10
C0011-12
B,1.5D
Main beam-RH (Y132)
55.0 Watts
Lamp-Side marker-Front-RH (A132)
E
Sheet1
RO,1.0D
C0011-2
C0011-1
B,1.5D
5.0 Watts
Side light-RH (Y134)
5.0 Watts

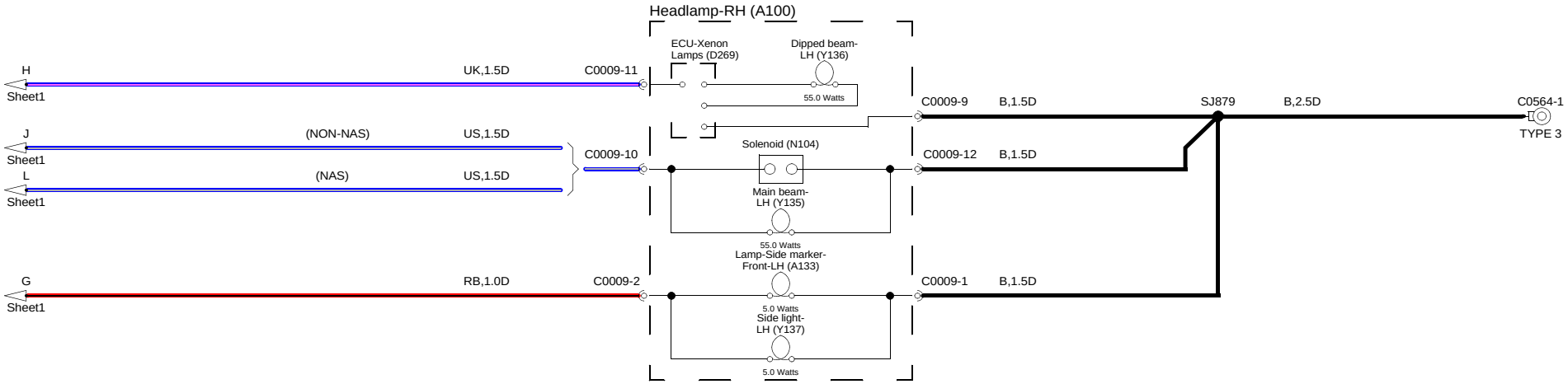
Headlamp-RH (A100)
ECU-Xenon Lamps (D269)
Dipped beam-LH (Y136)
55.0 Watts
H
Sheet1
UK,1.5D
C0009-11
C0009-9
B,1.5D
SJ879
B,2.5D
C0564-1
TYPE 3
J
Sheet1
(NON-NAS)
US,1.5D
Solenoid (N104)
C0009-10
C0009-12
B,1.5D
L
Sheet1
(NAS)
US,1.5D
Main beam-LH (Y135)
55.0 Watts
Lamp-Side marker-Front-LH (A133)
G
Sheet1
RB,1.0D
C0009-2
C0009-1
B,1.5D
5.0 Watts
Side light-LH (Y137)
5.0 Watts

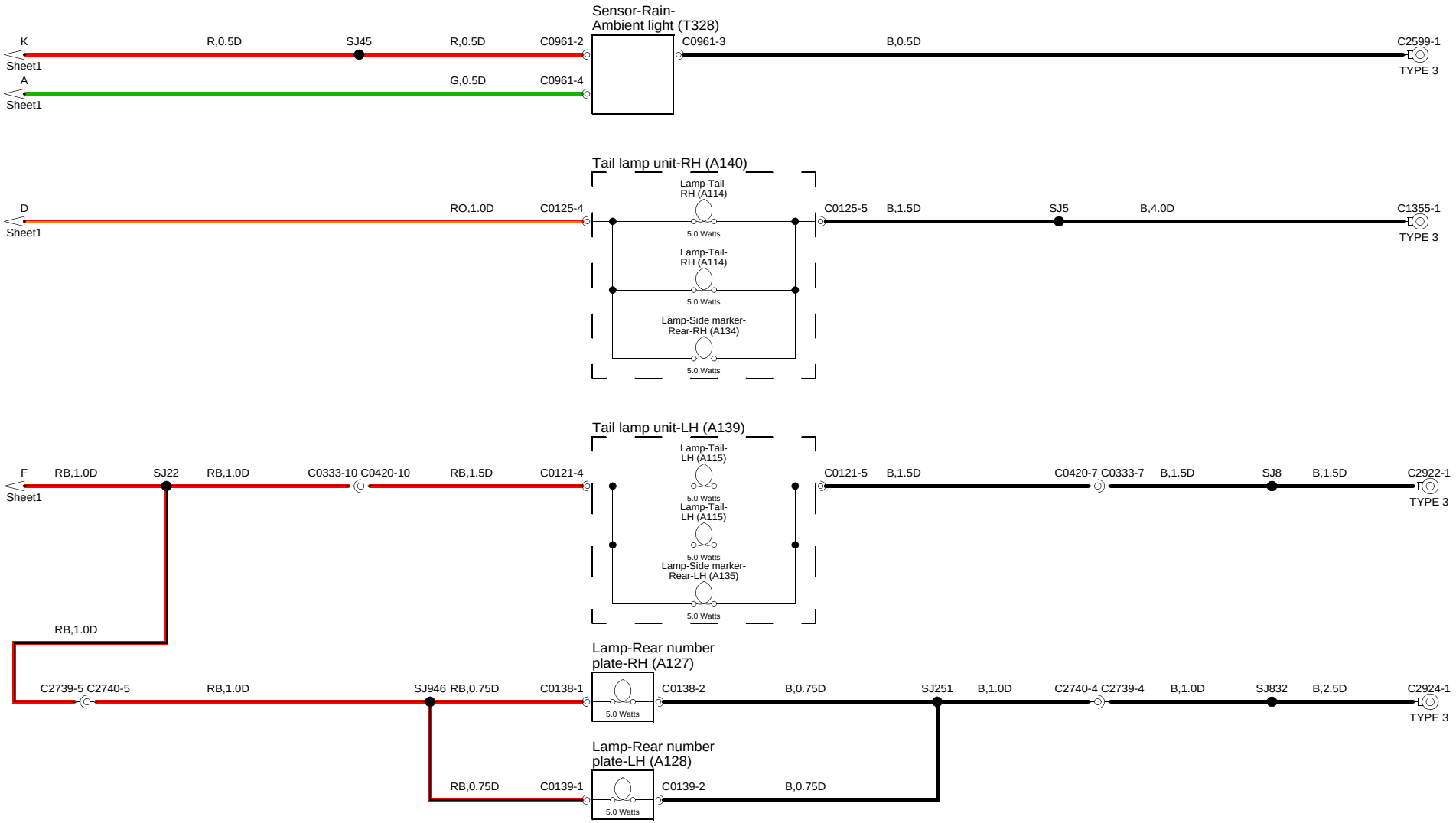
Sensor-Rain-Ambient light (T328)
K
Sheet1
R,0.5D
SJ45
R,0.5D
C0961-2
C0961-3
B,0.5D
C2599-1
TYPE 3
A
Sheet1
G,0.5D
C0961-4
Tail lamp unit-RH (A140)
Lamp-Tail-RH (A114)
D
Sheet1
RO,1.0D
C0125-4
5.0 Watts
C0125-5
B,1.5D
SJ5
B,4.0D
C1355-1
TYPE 3
Lamp-Tail-RH (A114)
5.0 Watts
Lamp-Side marker-Rear-RH (A134)
5.0 Watts
Tail lamp unit-LH (A139)
Lamp-Tail-LH (A115)
F
Sheet1
RB,1.0D
SJ22
RB,1.0D
C0333-10 C0420-10
RB,1.5D
C0121-4
5.0 Watts
C0121-5
B,1.5D
C0420-7 C0333-7
B,1.5D
SJ8
B,1.5D
C2922-1
TYPE 3
Lamp-Tail-LH (A115)
5.0 Watts
Lamp-Side marker-Rear-LH (A135)
5.0 Watts
RB,1.0D
Lamp-Rear number plate-RH (A127)
C2739-5 C2740-5
RB,1.0D
SJ946 RB,0.75D
C0138-1
5.0 Watts
C0138-2
B,0.75D
SJ251
B,1.0D
C2740-4 C2739-4
B,1.0D
SJ832
B,2.5D
C2924-1
TYPE 3
Lamp-Rear number plate-LH (A128)
RB,0.75D
C0139-1
5.0 Watts
C0139-2
B,0.75D

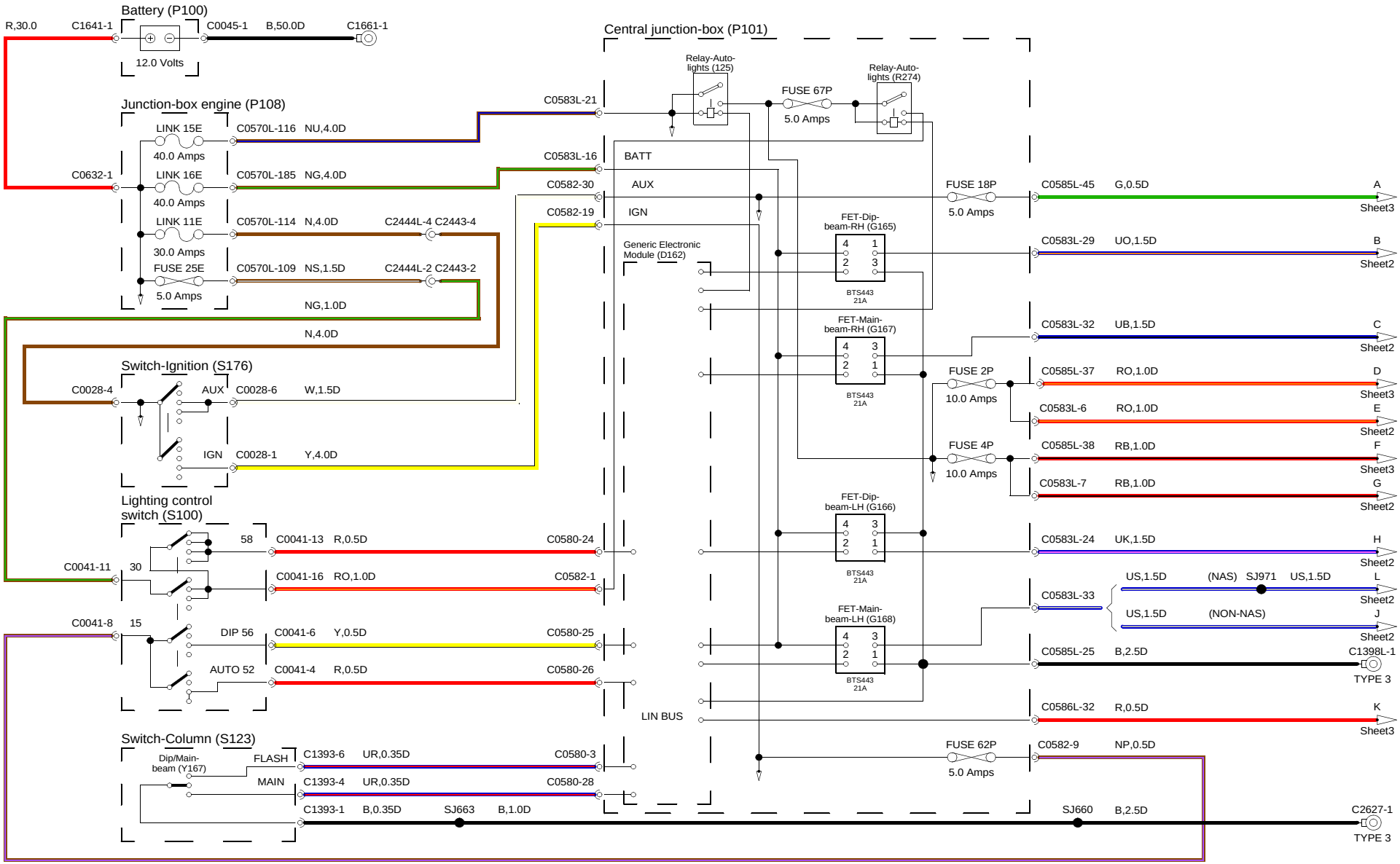
Battery (P100)
R,30.0
C1641-1
C0045-1
B,50.0D
C1661-1
12.0 Volts
Junction-box engine (P108)
LINK 15E
40.0 Amps
C0570L-116
NU,4.0D
C0632-1
LINK 16E
40.0 Amps
C0570L-185
NG,4.0D
LINK 11E
30.0 Amps
C0570L-114
N,4.0D
C2444L-4
C2443-4
FUSE 25E
5.0 Amps
C0570L-109
NS,1.5D
C2444L-2
C2443-2
NG,1.0D
N,4.0D
Switch-Ignition (S176)
C0028-4
AUX
C0028-6
W,1.5D
IGN
C0028-1
Y,4.0D
Lighting control switch (S100)
C0041-11
30
58
C0041-13
R,0.5D
C0580-24
C0041-16
RO,1.0D
C0582-1
C0041-8
15
DIP 56
C0041-6
Y,0.5D
C0580-25
AUTO 52
C0041-4
R,0.5D
C0580-26
Switch-Column (S123)
Dip/Main-beam (Y167)
FLASH
C1393-6
UR,0.35D
C0580-3
MAIN
C1393-4
UR,0.35D
C0580-28
C1393-1
B,0.35D
SJ663
B,1.0D
Central junction-box (P101)
C0583L-21
C0583L-16
BATT
C0582-30
AUX
C0582-19
IGN
Generic Electronic Module (D162)
LIN BUS
Relay-Auto-lights (125)
FUSE 67P
5.0 Amps
Relay-Auto-lights (R274)
FET-Dip-beam-RH (G165)
BTS443 21A
FET-Main-beam-RH (G167)
BTS443 21A
FET-Dip-beam-LH (G166)
BTS443 21A
FET-Main-beam-LH (G168)
BTS443 21A
FUSE 18P
5.0 Amps
FUSE 2P
10.0 Amps
FUSE 4P
10.0 Amps
FUSE 62P
5.0 Amps
C0585L-45
G,0.5D
A
Sheet3
C0583L-29
UO,1.5D
B
Sheet2
C0583L-32
UB,1.5D
C
Sheet2
C0585L-37
RO,1.0D
D
Sheet3
C0583L-6
RO,1.0D
E
Sheet2
C0585L-38
RB,1.0D
F
Sheet3
C0583L-7
RB,1.0D
G
Sheet2
C0583L-24
UK,1.5D
H
Sheet2
C0583L-33
US,1.5D
(NAS)
SJ971
US,1.5D
L
Sheet2
US,1.5D
(NON-NAS)
J
Sheet2
C0585L-25
B,2.5D
C1398L-1
TYPE 3
C0586L-32
R,0.5D
K
Sheet3
C0582-9
NP,0.5D
SJ660
B,2.5D
C2627-1
TYPE 3

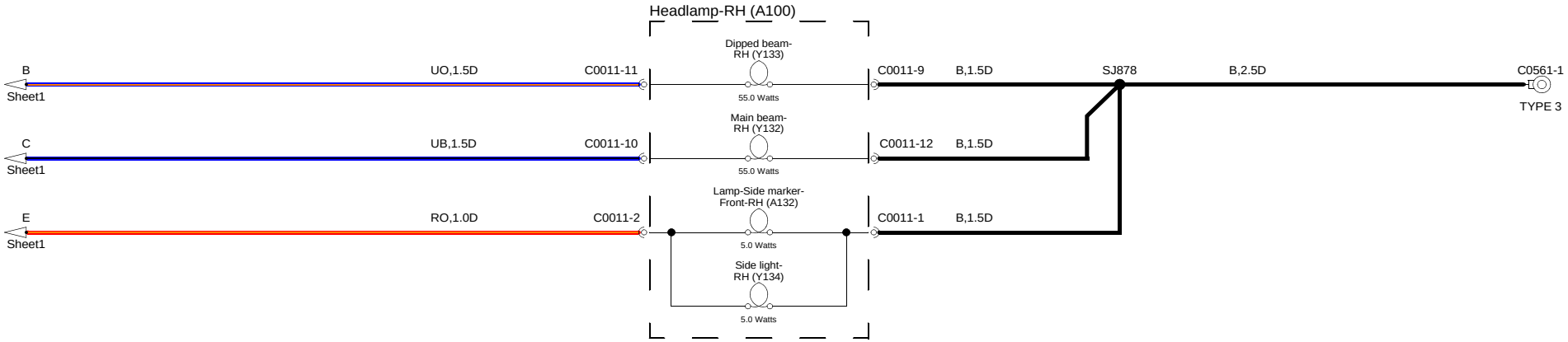
Headlamp-RH (A100)
B
Sheet1
UO,1.5D
C0011-11
Dipped beam-
RH (Y133)
55.0 Watts
C0011-9
B,1.5D
SJ878
B,2.5D
C0561-1
TYPE 3
C
Sheet1
UB,1.5D
C0011-10
Main beam-
RH (Y132)
55.0 Watts
C0011-12
B,1.5D
E
Sheet1
RO,1.0D
C0011-2
Lamp-Side marker-
Front-RH (A132)
5.0 Watts
C0011-1
B,1.5D
Side light-
RH (Y134)
5.0 Watts

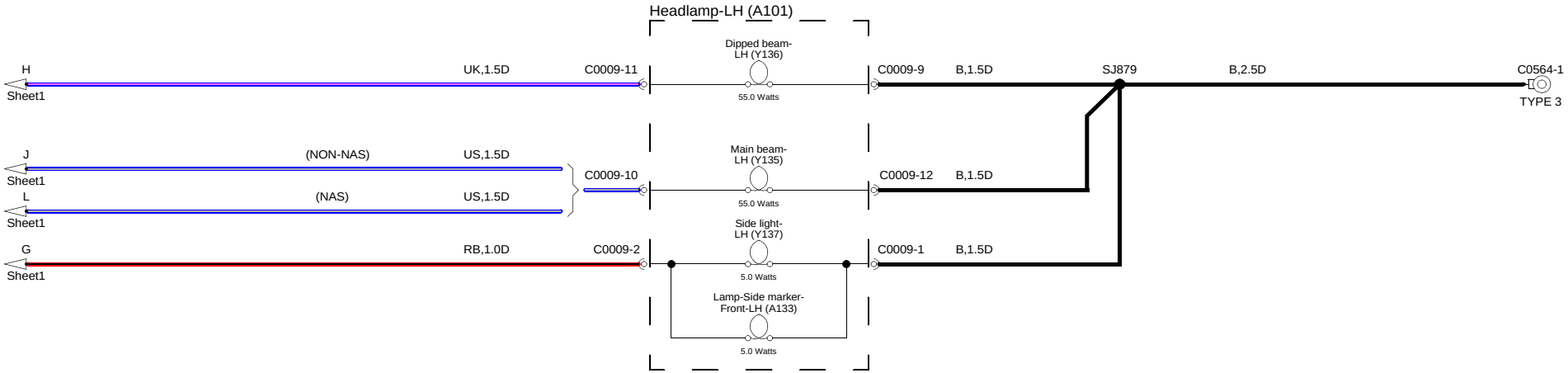
Headlamp-LH (A101)
H
Sheet1
UK,1.5D
C0009-11
Dipped beam-
LH (Y136)
55.0 Watts
C0009-9
B,1.5D
SJ879
B,2.5D
C0564-1
TYPE 3
J
Sheet1
(NON-NAS)
US,1.5D
L
Sheet1
(NAS)
US,1.5D
C0009-10
Main beam-
LH (Y135)
55.0 Watts
C0009-12
B,1.5D
G
Sheet1
RB,1.0D
C0009-2
Side light-
LH (Y137)
5.0 Watts
C0009-1
B,1.5D
Lamp-Side marker-
Front-LH (A133)
5.0 Watts

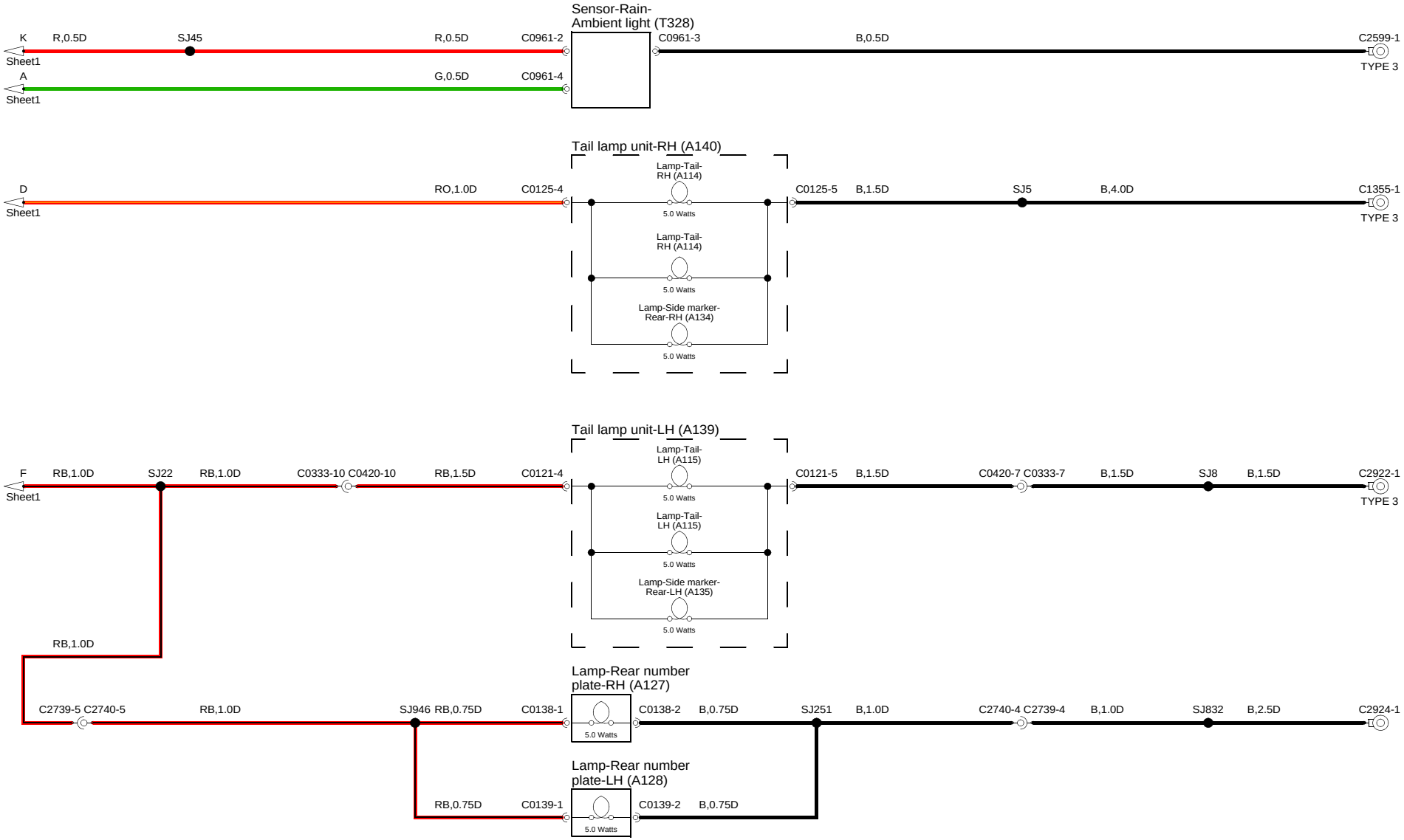
Sensor-Rain-Ambient light (T328)
K
R,0.5D
SJ45
R,0.5D
C0961-2
C0961-3
B,0.5D
C2599-1
Sheet1
TYPE 3
A
G,0.5D
C0961-4
Sheet1
Tail lamp unit-RH (A140)
Lamp-Tail-RH (A114)
D
RO,1.0D
C0125-4
C0125-5
B,1.5D
SJ5
B,4.0D
C1355-1
Sheet1
TYPE 3
5.0 Watts
Lamp-Tail-RH (A114)
5.0 Watts
Lamp-Side marker-Rear-RH (A134)
5.0 Watts
Tail lamp unit-LH (A139)
Lamp-Tail-LH (A115)
F
RB,1.0D
SJ22
RB,1.0D
C0333-10 C0420-10
RB,1.5D
C0121-4
C0121-5
B,1.5D
C0420-7 C0333-7
B,1.5D
SJ8
B,1.5D
C2922-1
Sheet1
TYPE 3
5.0 Watts
Lamp-Tail-LH (A115)
5.0 Watts
Lamp-Side marker-Rear-LH (A135)
5.0 Watts
RB,1.0D
Lamp-Rear number plate-RH (A127)
C2739-5 C2740-5
RB,1.0D
SJ946
RB,0.75D
C0138-1
C0138-2
B,0.75D
SJ251
B,1.0D
C2740-4 C2739-4
B,1.0D
SJ832
B,2.5D
C2924-1
5.0 Watts
Lamp-Rear number plate-LH (A128)
RB,0.75D
C0139-1
C0139-2
B,0.75D
5.0 Watts

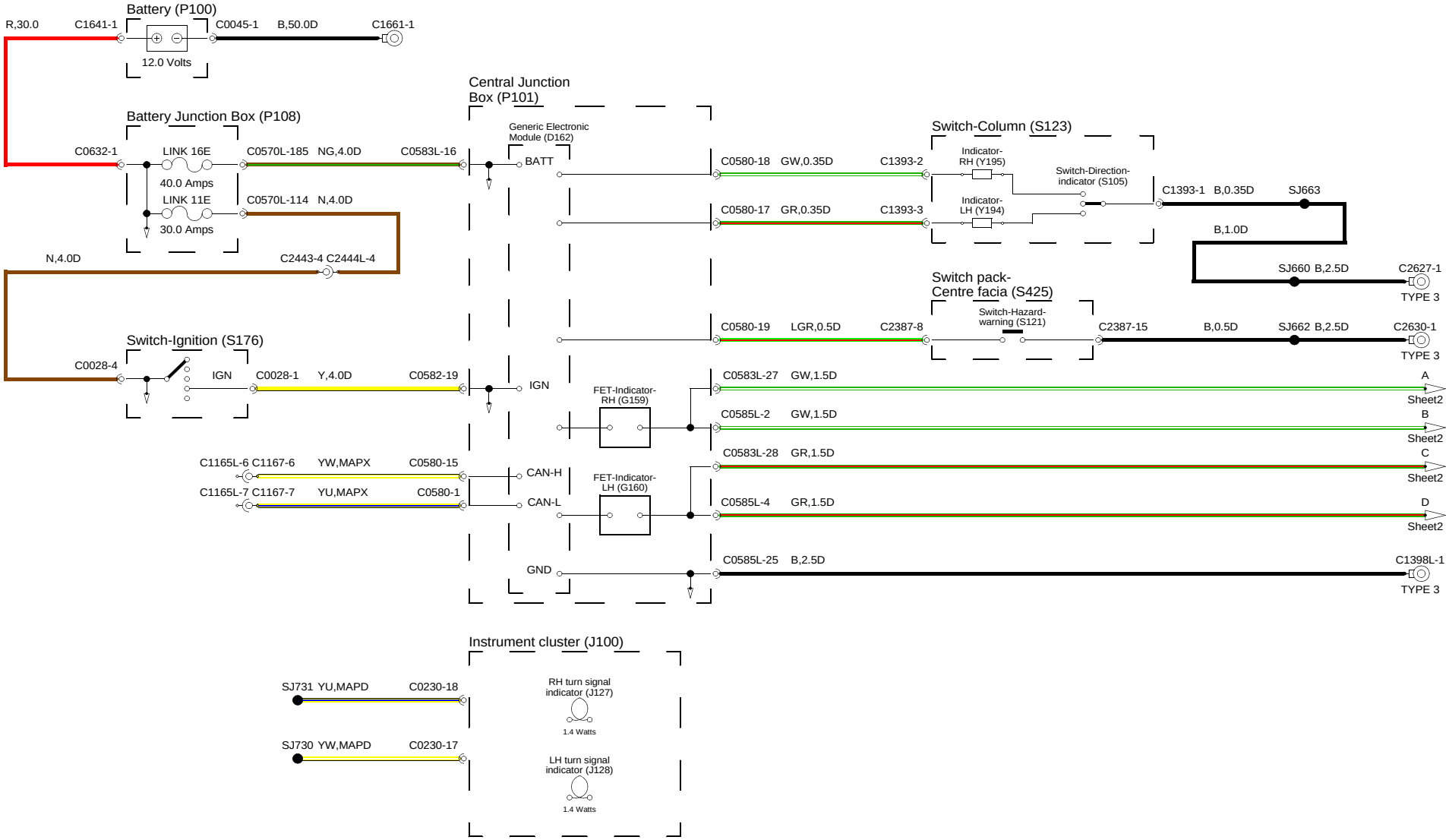
Battery (P100)
R,30.0
C1641-1
C0045-1
B,50.0D
C1661-1
12.0 Volts
Central Junction Box (P101)
Battery Junction Box (P108)
C0632-1
LINK 16E
40.0 Amps
C0570L-185
NG,4.0D
C0583L-16
LINK 11E
30.0 Amps
C0570L-114
N,4.0D
N,4.0D
C2443-4 C2444L-4
Generic Electronic Module (D162)
BATT
Switch-Column (S123)
C0580-18
GW,0.35D
C1393-2
Indicator-RH (Y195)
Switch-Direction-indicator (S105)
C1393-1
B,0.35D
SJ663
C0580-17
GR,0.35D
C1393-3
Indicator-LH (Y194)
B,1.0D
SJ660
B,2.5D
C2627-1
TYPE 3
Switch pack-Centre facia (S425)
Switch-Hazard-warning (S121)
C0580-19
LGR,0.5D
C2387-8
C2387-15
B,0.5D
SJ662
B,2.5D
C2630-1
TYPE 3
Switch-Ignition (S176)
C0028-4
IGN
C0028-1
Y,4.0D
C0582-19
IGN
FET-Indicator-RH (G159)
C0583L-27
GW,1.5D
A
Sheet2
C0585L-2
GW,1.5D
B
Sheet2
C1165L-6 C1167-6
YW,MAPX
C0580-15
CAN-H
C0583L-28
GR,1.5D
C
Sheet2
C1165L-7 C1167-7
YU,MAPX
C0580-1
CAN-L
FET-Indicator-LH (G160)
C0585L-4
GR,1.5D
D
Sheet2
GND
C0585L-25
B,2.5D
C1398L-1
TYPE 3
Instrument cluster (J100)
SJ731
YU,MAPD
C0230-18
RH turn signal indicator (J127)
1.4 Watts
SJ730
YW,MAPD
C0230-17
LH turn signal indicator (J128)
1.4 Watts

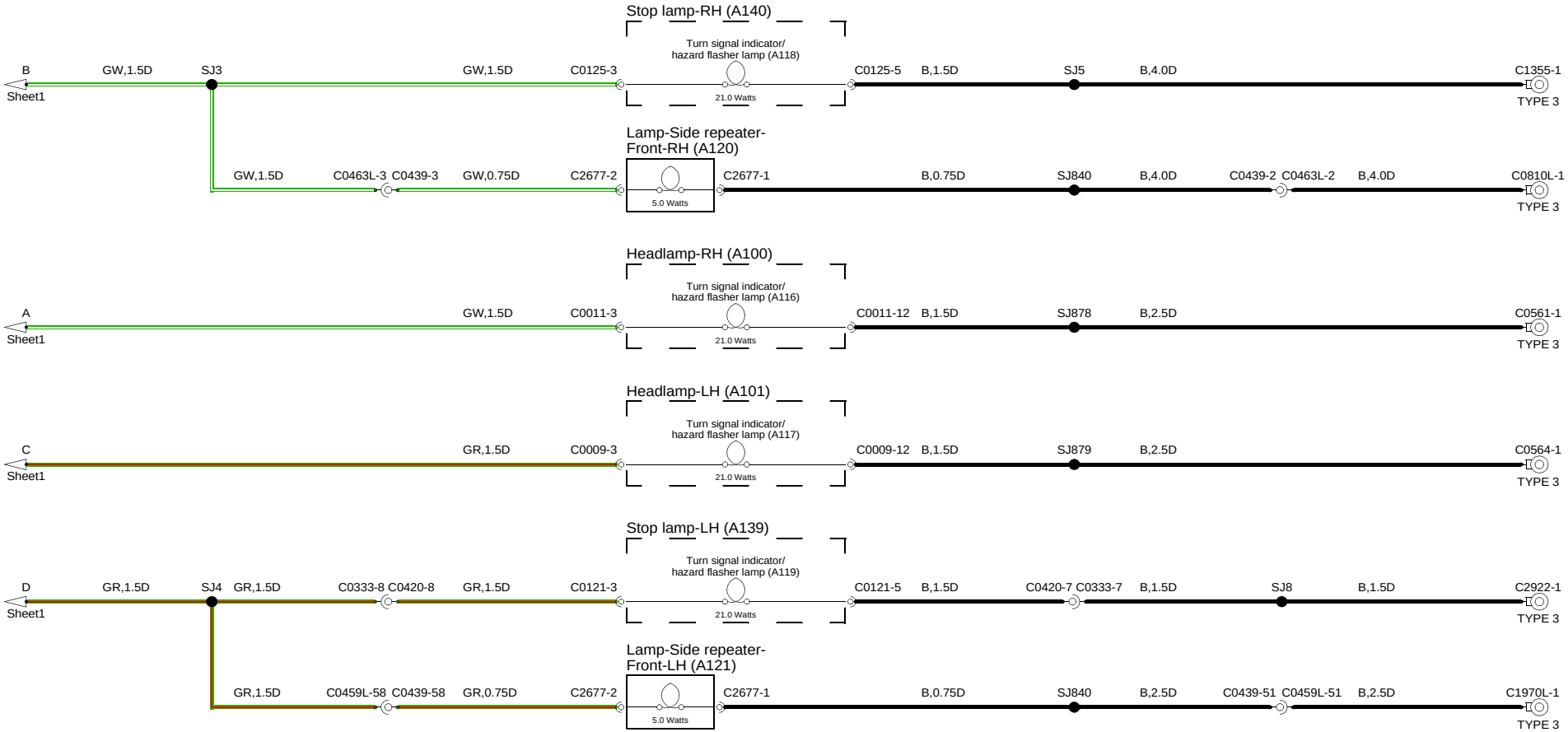
Stop lamp-RH (A140)
Turn signal indicator/
hazard flasher lamp (A118)
B
GW,1.5D
SJ3
GW,1.5D
C0125-3
C0125-5
B,1.5D
SJ5
B,4.0D
C1355-1
Sheet1
21.0 Watts
TYPE 3
Lamp-Side repeater-
Front-RH (A120)
GW,1.5D
C0463L-3
C0439-3
GW,0.75D
C2677-2
C2677-1
B,0.75D
SJ840
B,4.0D
C0439-2
C0463L-2
B,4.0D
C0810L-1
5.0 Watts
TYPE 3
Headlamp-RH (A100)
Turn signal indicator/
hazard flasher lamp (A116)
A
GW,1.5D
C0011-3
C0011-12
B,1.5D
SJ878
B,2.5D
C0561-1
Sheet1
21.0 Watts
TYPE 3
Headlamp-LH (A101)
Turn signal indicator/
hazard flasher lamp (A117)
C
GR,1.5D
C0009-3
C0009-12
B,1.5D
SJ879
B,2.5D
C0564-1
Sheet1
21.0 Watts
TYPE 3
Stop lamp-LH (A139)
Turn signal indicator/
hazard flasher lamp (A119)
D
GR,1.5D
SJ4
GR,1.5D
C0333-8
C0420-8
GR,1.5D
C0121-3
C0121-5
B,1.5D
C0420-7
C0333-7
B,1.5D
SJ8
B,1.5D
C2922-1
Sheet1
21.0 Watts
TYPE 3
Lamp-Side repeater-
Front-LH (A121)
GR,1.5D
C0459L-58
C0439-58
GR,0.75D
C2677-2
C2677-1
B,0.75D
SJ840
B,2.5D
C0439-51
C0459L-51
B,2.5D
C1970L-1
5.0 Watts
TYPE 3

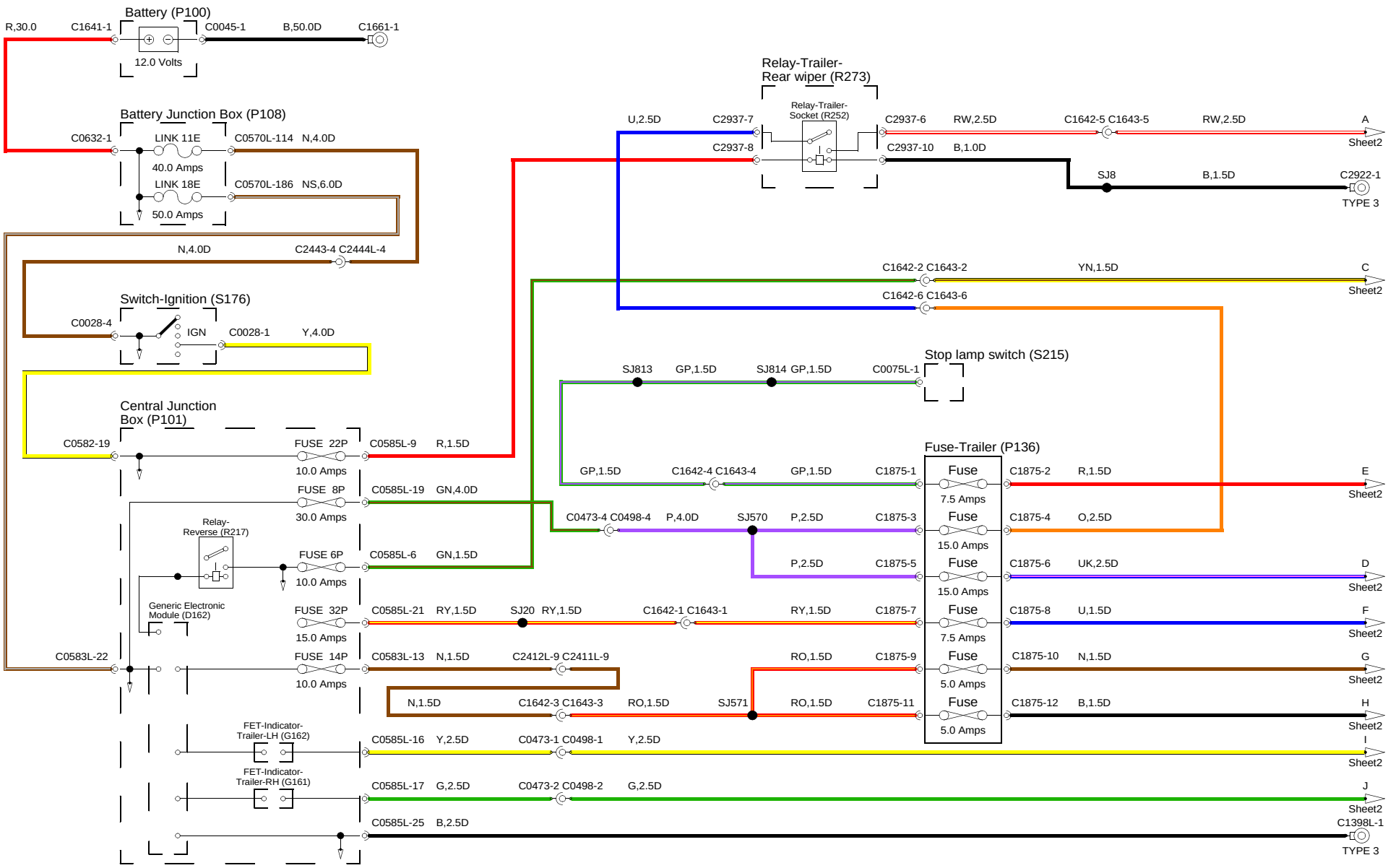
Battery (P100)
R,30.0
C1641-1
C0045-1
B,50.0D
C1661-1
12.0 Volts
Battery Junction Box (P108)
C0632-1
LINK 11E
C0570L-114
N,4.0D
40.0 Amps
LINK 18E
C0570L-186
NS,6.0D
50.0 Amps
N,4.0D
C2443-4 C2444L-4
Switch-Ignition (S176)
C0028-4
IGN
C0028-1
Y,4.0D
Central Junction Box (P101)
C0582-19
FUSE 22P
C0585L-9
R,1.5D
10.0 Amps
FUSE 8P
C0585L-19
GN,4.0D
30.0 Amps
Relay-Reverse (R217)
FUSE 6P
C0585L-6
GN,1.5D
10.0 Amps
Generic Electronic Module (D162)
FUSE 32P
C0585L-21
RY,1.5D
SJ20
RY,1.5D
C1642-1 C1643-1
RY,1.5D
C1875-7
15.0 Amps
C0583L-22
FUSE 14P
C0583L-13
N,1.5D
C2412L-9 C2411L-9
10.0 Amps
N,1.5D
C1642-3 C1643-3
RO,1.5D
SJ571
RO,1.5D
C1875-11
FET-Indicator-Trailer-LH (G162)
C0585L-16
Y,2.5D
C0473-1 C0498-1
Y,2.5D
FET-Indicator-Trailer-RH (G161)
C0585L-17
G,2.5D
C0473-2 C0498-2
G,2.5D
C0585L-25
B,2.5D
C1398L-1
TYPE 3
Relay-Trailer-Rear wiper (R273)
Relay-Trailer-Socket (R252)
U,2.5D
C2937-7
C2937-8
C2937-6
RW,2.5D
C1642-5 C1643-5
RW,2.5D
A
Sheet2
C2937-10
B,1.0D
SJ8
B,1.5D
C2922-1
TYPE 3
C1642-2 C1643-2
YN,1.5D
C
Sheet2
C1642-6 C1643-6
Stop lamp switch (S215)
SJ813
GP,1.5D
SJ814
GP,1.5D
C0075L-1
Fuse-Trailer (P136)
GP,1.5D
C1642-4 C1643-4
GP,1.5D
C1875-1
Fuse
7.5 Amps
C1875-2
R,1.5D
E
Sheet2
C0473-4 C0498-4
P,4.0D
SJ570
P,2.5D
C1875-3
Fuse
15.0 Amps
C1875-4
O,2.5D
P,2.5D
C1875-5
Fuse
15.0 Amps
C1875-6
UK,2.5D
D
Sheet2
Fuse
7.5 Amps
C1875-8
U,1.5D
F
Sheet2
RO,1.5D
C1875-9
Fuse
5.0 Amps
C1875-10
N,1.5D
G
Sheet2
Fuse
5.0 Amps
C1875-12
B,1.5D
H
Sheet2
I
Sheet2
J
Sheet2

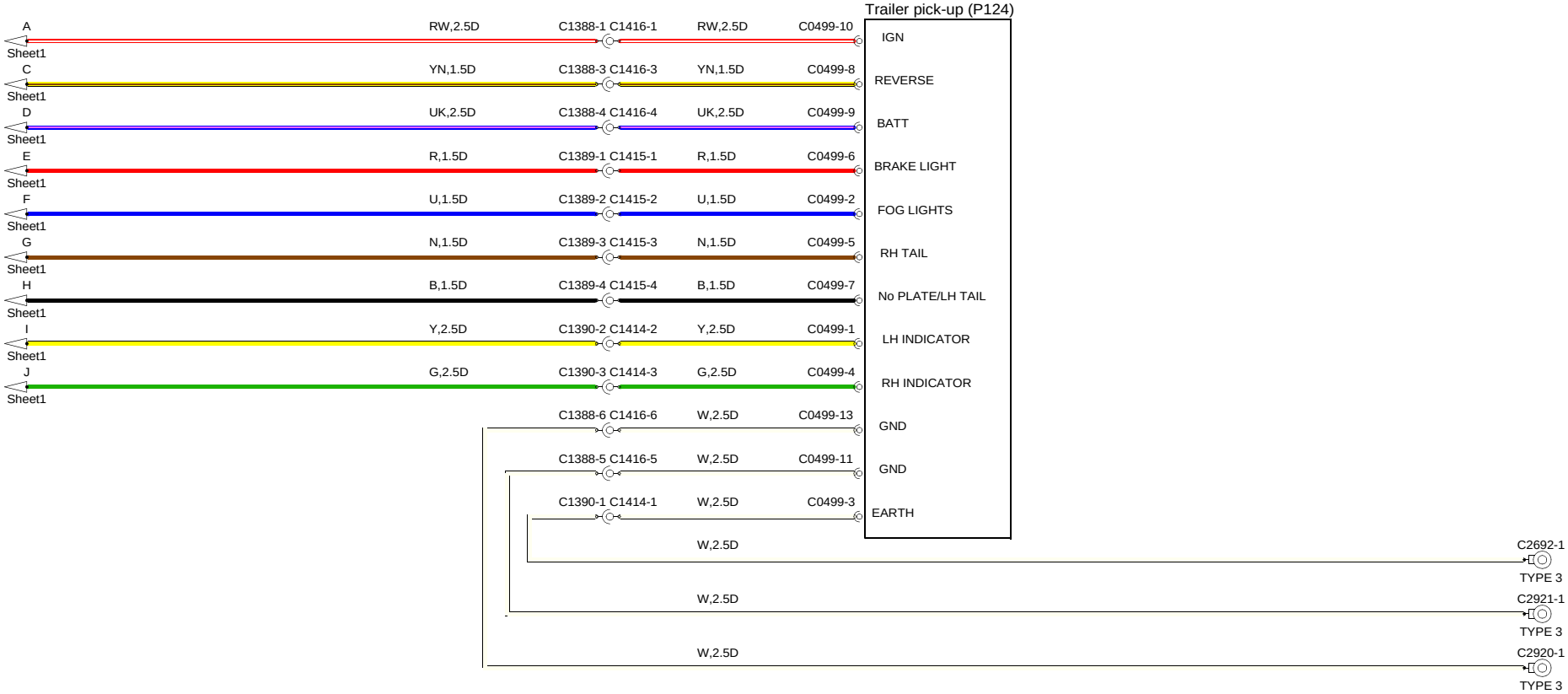
Trailer pick-up (P124)
A
Sheet1
RW,2.5D
C1388-1 C1416-1
RW,2.5D
C0499-10
IGN
C
Sheet1
YN,1.5D
C1388-3 C1416-3
YN,1.5D
C0499-8
REVERSE
D
Sheet1
UK,2.5D
C1388-4 C1416-4
UK,2.5D
C0499-9
BATT
E
Sheet1
R,1.5D
C1389-1 C1415-1
R,1.5D
C0499-6
BRAKE LIGHT
F
Sheet1
U,1.5D
C1389-2 C1415-2
U,1.5D
C0499-2
FOG LIGHTS
G
Sheet1
N,1.5D
C1389-3 C1415-3
N,1.5D
C0499-5
RH TAIL
H
Sheet1
B,1.5D
C1389-4 C1415-4
B,1.5D
C0499-7
No PLATE/LH TAIL
I
Sheet1
Y,2.5D
C1390-2 C1414-2
Y,2.5D
C0499-1
LH INDICATOR
J
Sheet1
G,2.5D
C1390-3 C1414-3
G,2.5D
C0499-4
RH INDICATOR
C1388-6 C1416-6
W,2.5D
C0499-13
GND
C1388-5 C1416-5
W,2.5D
C0499-11
GND
C1390-1 C1414-1
W,2.5D
C0499-3
EARTH
W,2.5D
C2692-1
TYPE 3
W,2.5D
C2921-1
TYPE 3
W,2.5D
C2920-1
TYPE 3

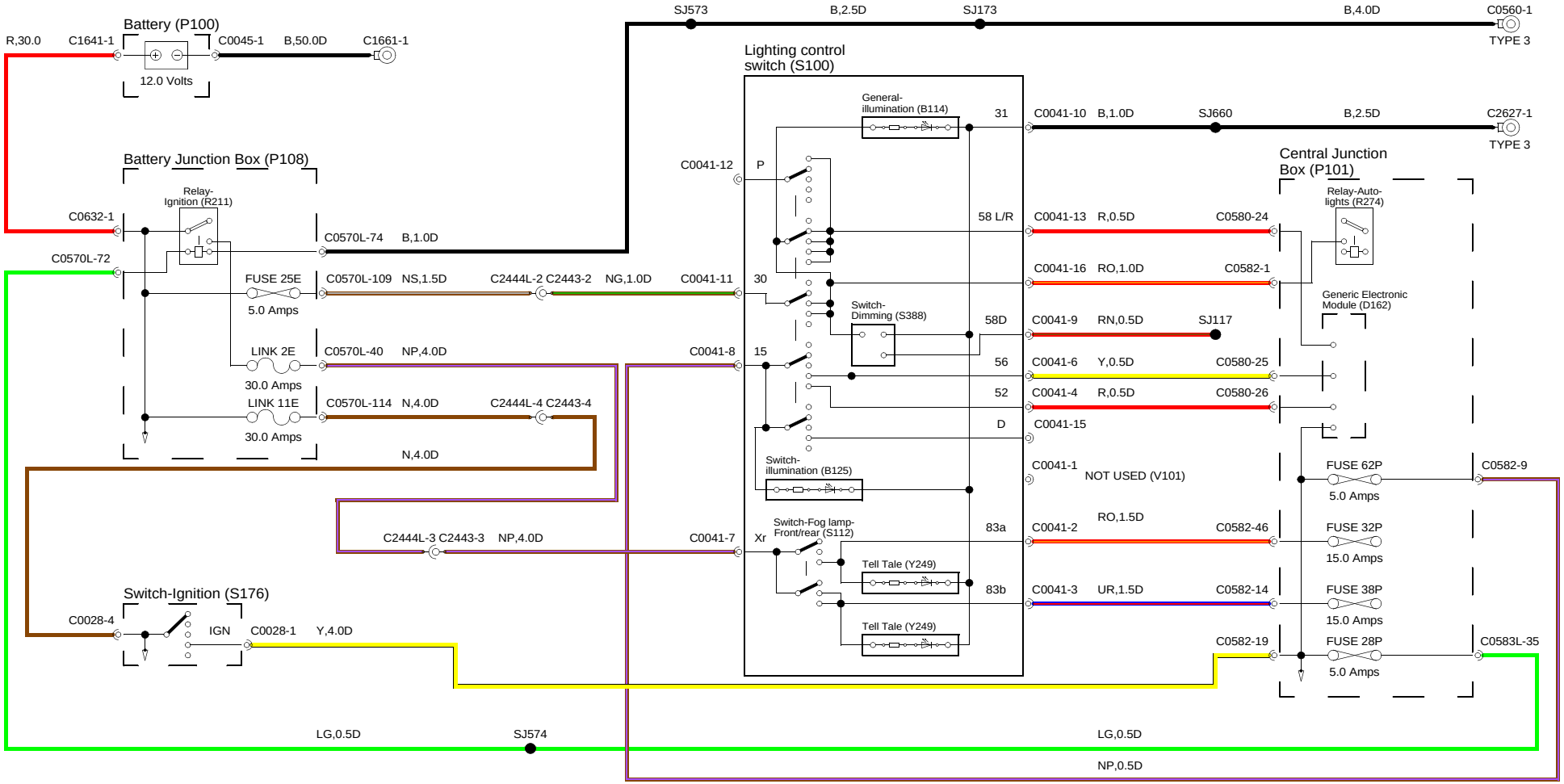
Battery (P100)
R,30.0
C1641-1
C0045-1
B,50.0D
C1661-1
12.0 Volts
SJ573
B,2.5D
SJ173
B,4.0D
C0560-1
TYPE 3
Lighting control switch (S100)
General-illumination (B114)
31
C0041-10
B,1.0D
SJ660
B,2.5D
C2627-1
TYPE 3
Battery Junction Box (P108)
Relay-Ignition (R211)
C0632-1
C0570L-72
C0570L-74
B,1.0D
C0041-12
P
58 L/R
C0041-13
R,0.5D
C0580-24
Central Junction Box (P101)
Relay-Auto-lights (R274)
FUSE 25E
5.0 Amps
C0570L-109
NS,1.5D
C2444L-2 C2443-2
NG,1.0D
C0041-11
30
C0041-16
RO,1.0D
C0582-1
Generic Electronic Module (D162)
Switch-Dimming (S388)
58D
C0041-9
RN,0.5D
SJ117
LINK 2E
30.0 Amps
C0570L-40
NP,4.0D
C0041-8
15
56
C0041-6
Y,0.5D
C0580-25
52
C0041-4
R,0.5D
C0580-26
LINK 11E
30.0 Amps
C0570L-114
N,4.0D
C2444L-4 C2443-4
D
C0041-15
N,4.0D
Switch-illumination (B125)
C0041-1
NOT USED (V101)
FUSE 62P
5.0 Amps
C0582-9
C2444L-3 C2443-3
NP,4.0D
C0041-7
Xr
Switch-Fog lamp-Front/rear (S112)
83a
C0041-2
RO,1.5D
C0582-46
FUSE 32P
15.0 Amps
Tell Tale (Y249)
83b
C0041-3
UR,1.5D
C0582-14
FUSE 38P
15.0 Amps
Switch-Ignition (S176)
C0028-4
IGN
C0028-1
Y,4.0D
Tell Tale (Y249)
C0582-19
FUSE 28P
5.0 Amps
C0583L-35
LG,0.5D
SJ574
LG,0.5D
NP,0.5D

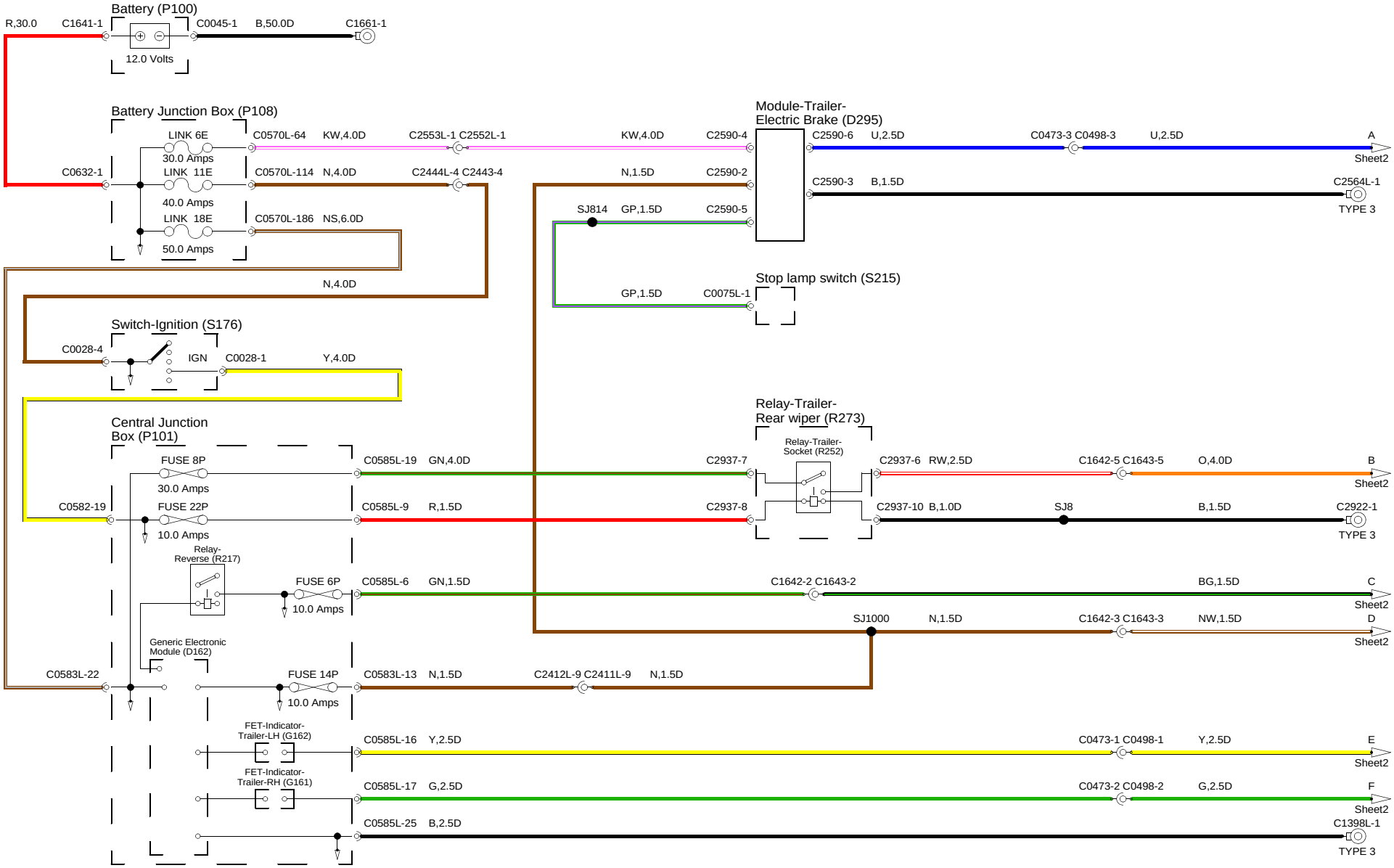
Battery (P100)
R,30.0
C1641-1
C0045-1
B,50.0D
C1661-1
12.0 Volts
Battery Junction Box (P108)
LINK 6E
30.0 Amps
C0570L-64
KW,4.0D
C2553L-1 C2552L-1
KW,4.0D
C2590-4
C0632-1
LINK 11E
40.0 Amps
C0570L-114
N,4.0D
C2444L-4 C2443-4
N,1.5D
C2590-2
LINK 18E
50.0 Amps
C0570L-186
NS,6.0D
SJ814
GP,1.5D
C2590-5
N,4.0D
Module-Trailer-
Electric Brake (D295)
C2590-6
U,2.5D
C0473-3 C0498-3
U,2.5D
A
Sheet2
C2590-3
B,1.5D
C2564L-1
TYPE 3
Stop lamp switch (S215)
GP,1.5D
C0075L-1
Switch-Ignition (S176)
C0028-4
IGN
C0028-1
Y,4.0D
Central Junction
Box (P101)
FUSE 8P
30.0 Amps
C0585L-19
GN,4.0D
C2937-7
C0582-19
FUSE 22P
10.0 Amps
C0585L-9
R,1.5D
C2937-8
Relay-Trailer-
Rear wiper (R273)
Relay-Trailer-
Socket (R252)
C2937-6
RW,2.5D
C1642-5 C1643-5
O,4.0D
B
Sheet2
C2937-10
B,1.0D
SJ8
B,1.5D
C2922-1
TYPE 3
Relay-
Reverse (R217)
FUSE 6P
10.0 Amps
C0585L-6
GN,1.5D
C1642-2 C1643-2
BG,1.5D
C
Sheet2
SJ1000
N,1.5D
C1642-3 C1643-3
NW,1.5D
D
Sheet2
Generic Electronic
Module (D162)
C0583L-22
FUSE 14P
10.0 Amps
C0583L-13
N,1.5D
C2412L-9 C2411L-9
N,1.5D
FET-Indicator-
Trailer-LH (G162)
C0585L-16
Y,2.5D
C0473-1 C0498-1
Y,2.5D
E
Sheet2
FET-Indicator-
Trailer-RH (G161)
C0585L-17
G,2.5D
C0473-2 C0498-2
G,2.5D
F
Sheet2
C0585L-25
B,2.5D
C1398L-1
TYPE 3

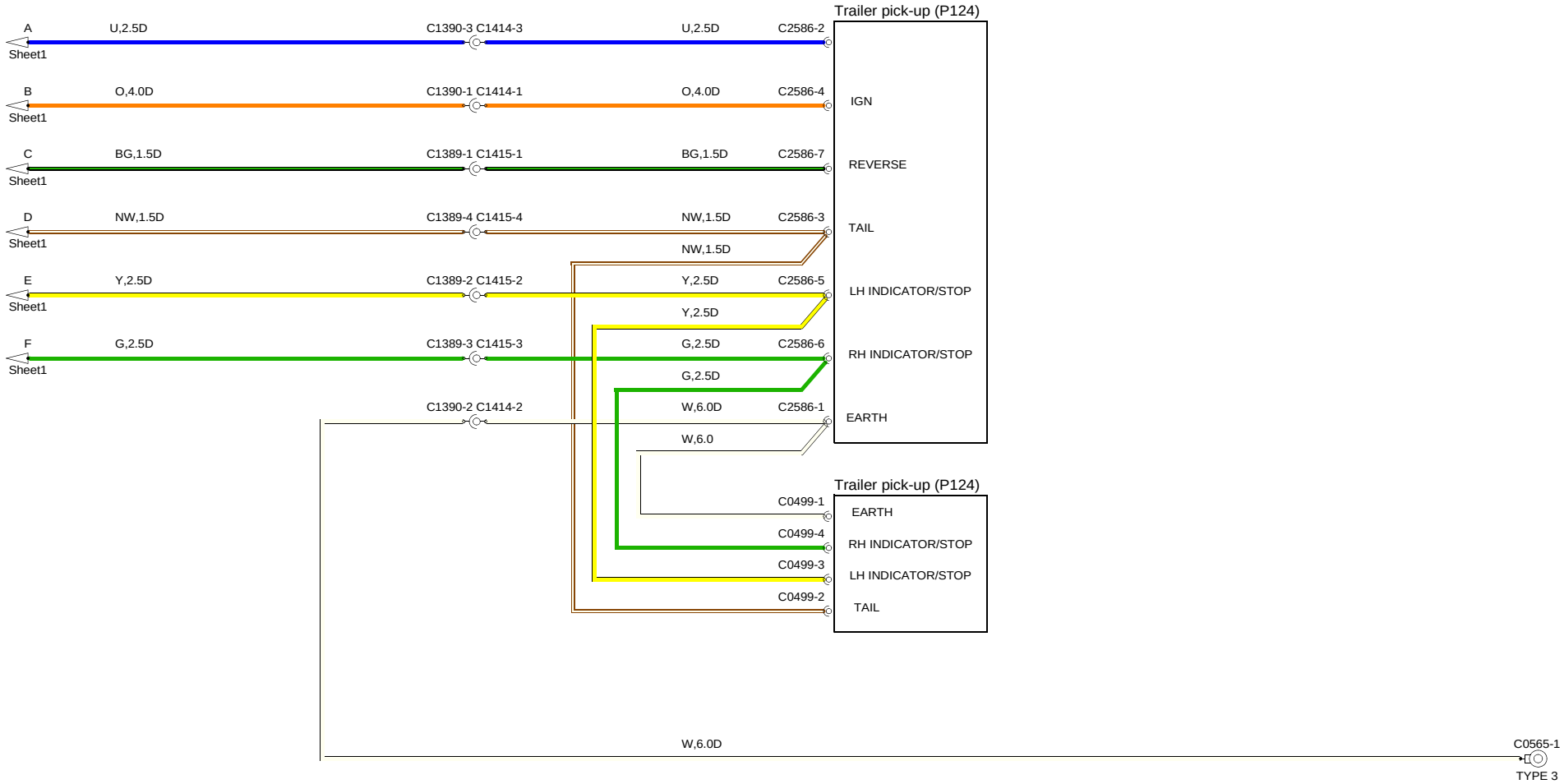
Trailer pick-up (P124)
A
U,2.5D
C1390-3 C1414-3
U,2.5D
C2586-2
Sheet1
B
O,4.0D
C1390-1 C1414-1
O,4.0D
C2586-4
IGN
Sheet1
C
BG,1.5D
C1389-1 C1415-1
BG,1.5D
C2586-7
REVERSE
Sheet1
D
NW,1.5D
C1389-4 C1415-4
NW,1.5D
C2586-3
TAIL
Sheet1
NW,1.5D
E
Y,2.5D
C1389-2 C1415-2
Y,2.5D
C2586-5
LH INDICATOR/STOP
Sheet1
Y,2.5D
F
G,2.5D
C1389-3 C1415-3
G,2.5D
C2586-6
RH INDICATOR/STOP
Sheet1
G,2.5D
C1390-2 C1414-2
W,6.0D
C2586-1
EARTH
W,6.0
Trailer pick-up (P124)
C0499-1
EARTH
C0499-4
RH INDICATOR/STOP
C0499-3
LH INDICATOR/STOP
C0499-2
TAIL
W,6.0D
C0565-1
TYPE 3

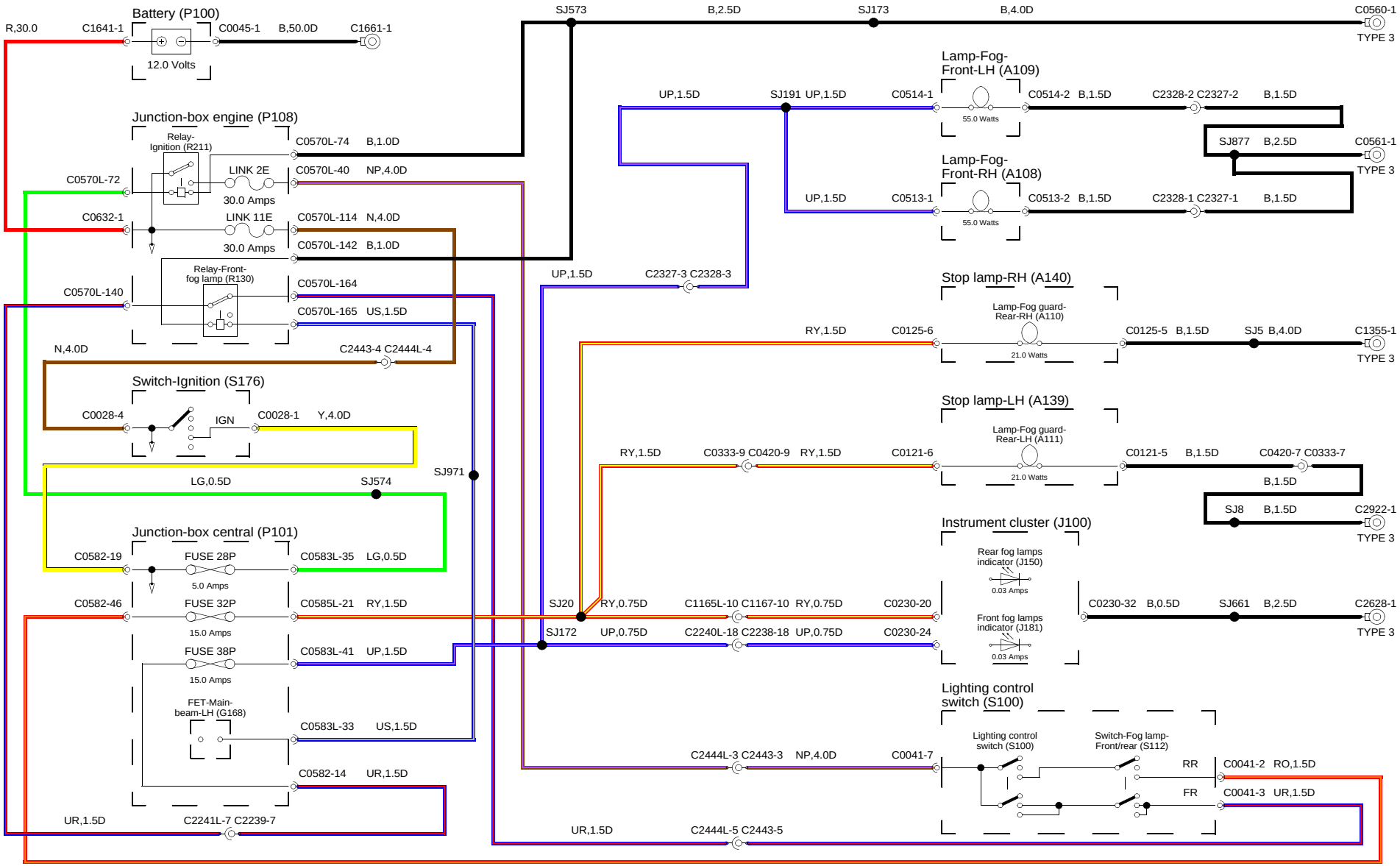
Battery (P100)
R,30.0
C1641-1
C0045-1
B,50.0D
C1661-1
12.0 Volts
SJ573
B,2.5D
SJ173
B,4.0D
C0560-1
TYPE 3
Lamp-Fog-Front-LH (A109)
UP,1.5D
SJ191 UP,1.5D
C0514-1
C0514-2 B,1.5D
C2328-2 C2327-2
B,1.5D
55.0 Watts
SJ877 B,2.5D
C0561-1
TYPE 3
Lamp-Fog-Front-RH (A108)
UP,1.5D
C0513-1
C0513-2 B,1.5D
C2328-1 C2327-1
B,1.5D
55.0 Watts
Junction-box engine (P108)
Relay-Ignition (R211)
C0570L-74 B,1.0D
C0570L-72
LINK 2E
C0570L-40 NP,4.0D
30.0 Amps
C0632-1
LINK 11E
C0570L-114 N,4.0D
30.0 Amps
C0570L-142 B,1.0D
Relay-Front-fog lamp (R130)
C0570L-140
C0570L-164
C0570L-165 US,1.5D
UP,1.5D
C2327-3 C2328-3
Stop lamp-RH (A140)
Lamp-Fog guard-Rear-RH (A110)
RY,1.5D
C0125-6
C0125-5 B,1.5D
SJ5 B,4.0D
C1355-1
TYPE 3
21.0 Watts
N,4.0D
C2443-4 C2444L-4
Switch-Ignition (S176)
C0028-4
IGN
C0028-1 Y,4.0D
Stop lamp-LH (A139)
Lamp-Fog guard-Rear-LH (A111)
RY,1.5D
C0333-9 C0420-9 RY,1.5D
C0121-6
C0121-5 B,1.5D
C0420-7 C0333-7
21.0 Watts
B,1.5D
SJ971
LG,0.5D
SJ574
SJ8 B,1.5D
C2922-1
TYPE 3
Junction-box central (P101)
Instrument cluster (J100)
C0582-19
FUSE 28P
C0583L-35 LG,0.5D
5.0 Amps
Rear fog lamps indicator (J150)
0.03 Amps
C0582-46
FUSE 32P
C0585L-21 RY,1.5D
SJ20
RY,0.75D
C1165L-10 C1167-10 RY,0.75D
C0230-20
C0230-32 B,0.5D
SJ661 B,2.5D
C2628-1
TYPE 3
15.0 Amps
SJ172
UP,0.75D
C2240L-18 C2238-18 UP,0.75D
C0230-24
Front fog lamps indicator (J181)
0.03 Amps
FUSE 38P
C0583L-41 UP,1.5D
15.0 Amps
Lighting control switch (S100)
FET-Main-beam-LH (G168)
C0583L-33 US,1.5D
Lighting control switch (S100)
Switch-Fog lamp-Front/rear (S112)
C2444L-3 C2443-3 NP,4.0D
C0041-7
RR
C0041-2 RO,1.5D
C0582-14 UR,1.5D
FR
C0041-3 UR,1.5D
UR,1.5D
C2241L-7 C2239-7
UR,1.5D
C2444L-5 C2443-5